VILLAGE OF PALATINE

VILLAGE HALL - COUNCIL CHAMBERS 200 E. WOOD STREET
PALATINE, IL 60067-5339 – (847) 359-9050
http://www.palatine.il.us

PLAN COMMISSION

AGENDA ● AUGUST 21, 2018

Village Hall - Council Chambers	Regular Meeting	7:00 PM

I. CALL TO ORDER

II. APPROVAL OF MINUTES

1. Plan Commission - Regular Meeting - Aug 7, 2018 7:00 PM

III. PUBLIC HEARING

1. 833 W. Hillside Street

   Preliminary and Final Plat of Subdivision to permit a 4-lot single-family residential development
   Rezoning from R-1 Single-Family Residential to R-2 Single-Family Residential
   Variation to permit a lot width of 74 feet for Lot 3 instead of the minimum required 75 feet

2. 1500, 1532, and 1548 N. Hicks Road

   Preliminary and Final Planned Development to allow 12 ranch-style townhomes

   Preliminary and Final Plat of Subdivision

IV. COMMUNICATIONS

V. ADJOURNMENT

VILLAGE OF PALATINE

VILLAGE HALL - COUNCIL CHAMBERS 200 E. WOOD STREET
PALATINE, IL 60067-5339 – (847) 359-9050
http://www.palatine.il.us

PLAN COMMISSION

MINUTES ● AUGUST 7, 2018

Village Hall - Council Chambers | **Regular Meeting** | **7:00 PM**

I. CALL TO ORDER

Attendee Name	Title	Status	Arrived
Conrad Hansen	Plan Commissioner	Present	
Dennis Dwyer	Chairman	Present	
Jane Robins	Plan Commissioner	Present	
Patrick Noonan	Plan Commissioner	Present	
Teri Williams	Plan Commissioner	Present	
Eric Friedman	Plan Commissioner	Present	
Rodney Bettenhausen	Plan Commissioner	Present	
Robert Kolososki	Plan Commissioner	Present	
Stephen Fedota	Plan Commissioner	Present	

II. APPROVAL OF MINUTES

1. Plan Commission - Regular Meeting - Jul 17, 2018 7:00 PM **- Accepted**

Mr. Noonan made a motion to approve the minutes of July 17, 2018; seconded by Mr Fedota.

RESULT:	**ACCEPTED [UNANIMOUS]**
MOVER:	Patrick Noonan, Plan Commissioner
SECONDER:	Stephen Fedota, Plan Commissioner
AYES:	Hansen, Dwyer, Robins, Noonan, Williams, Friedman, Bettenhausen, Kolososki, Fedota

III. PUBLIC HEARING

1. 892 E. Glencoe Street **- Recommended to Approve**

Chairman Dwyer read the notice of public hearing that was published in the Daily Herald on July 23, 2018 and mailed to the owners of the surrounding properties.

The following petitioner's exhibits were introduced:

1. Public Notice
2. Petition for Hearing
3. Proof of Ownership
4. Plat of Survey
5. Site Plan
6. Plat of Subdivision
7. Engineering Plans
8. Lot 2 Site Plan
9. Architectural Plans
10. Engineer's Cost Estimate

Sworn in Mr. Tom Connelly, Petitioner, 892 E. Glencoe Street
Mr. Connelly explained they are looking to either take down the house or move the house. He stated one neighbor is interested in moving the house to his location. Mr. Connelly explained it will be 2 lots mimicking the northeast corner of Leonard Road and Glencoe Street that was done in 2006 or 2008. He explained his engineers have mimicked the same draft and specifications basically asking for the same variances and setbacks.

Mr. Kolososki asked if both homes will have the same floor plan.
Mr. Connelly explained he is leaving it open. He stated this home is for him and his wife who are empty nesters now.

Mr. Friedman spoke to the property layout and how it is more setup for home to be turned 90 degrees.
Mr. Connelly re-explained how they mimicked the northeast corner.

Sworn in staff Ms. Katie Romack and Mr. Ben Vyverberg

Ms. Romack gave a brief overview of the request explaining the existing lot is just under ½ an acre which the petitioner is proposing to subdivide into 2 new lots. She spoke to Lot 1 (interior lot) which meets all the R-2 setbacks with an exception for a variation for lot depth. She spoke to Lot 2 (corner lot) which also needs a variation for lot depth. She spoke to the orientation of the home facing Glencoe Street instead of its legal front yard of Leonard Road. Ms. Romack pointed out it appears to meet the setbacks but because of the property being turned it requires setback relief. She spoke to the Glencoe Corner Subdivision approved in 2006 that the petitioner had mentioned, which received similar relief

Minutes Acceptance: Minutes of Aug 7, 2018 7:00 PM (Approval of Minutes)

for lot depth and setbacks. She pointed out the definition of front yard was different when that subdivision was approved.

Chairman Dwyer asked what the variations for that subdivision were.
Ms. Romack explained they received Preliminary and Final Subdivision for a 2-lot subdivision, Rezoning from R-1 to R-2, Variation of 10 feet to permit the lot to be 100 f feet in depth instead of the 110 feet, Special Use to permit the setback to be 30 feet instead of the required 40 feet.

Chairman Dwyer clarified they had fewer variations than this request.
Ms. Romack answered yes.

Ms. Romack referred to slides showing existing conditions. She stated Engineering has commented they will be required to re-grade the front and side swales to accommodate the drainage for the parkway for the 2 lots to the north. She referred to the engineering plans for Lot 2 slide. Ms. Romack stated new sewer and water service will be provided by connecting to the existing services in the Glencoe Street right-of-way. She stated they will be installing sidewalks along Leonard Road and will have to install parkway trees. Ms. Romack referred to the slides of the elevations and floor plan explaining it is being proposed as a single-story residence.

Mr. Fedota asked if the surface drainage is from north to south.
Ms. Romack explained referring to the aerial.

Sworn in Mr. Robert Lange, 28 S. Leonard Road Palatine, IL
Mr. Lange spoke to the drainage provision. He spoke to conversation he has had with Mr. Garcia the Village Engineering inspector, who explained to him that his property is in the summit and how the water is supposed to drain both ways on Leonard Road. He stated both him and Mr. Garcia thinks the storm sewer has collapsed over the years. Mr. Lange stated he has spoken to Mr. Ruppert who said he would come out and look at it to help the flow of water. He spoke to the standing water and the mosquitos. He stated he just found out the proposal will change the grass ditches. He spoke to the character of the neighborhood with all homes being within 2 feet as close to Leonard Road. Mr. Lange pointed out with this property the homes will not be symmetrical and aesthetically it doesn't fit. He pointed out 40 S. Leonard will be affected both from the front and the rear. Mr. Lange stated their block is on septic so doesn't know what kind of impact that will have on the efficiency of their septic fields.

Sworn in Ms. Trina Callo, 40 S. Leonard Road Palatine, IL
Ms. Callo stated she has lived their 20 years and likes her neighbor. She stated she bought her home because it was a nice open area and pointed out the second home will have a view right into her backyard. She spoke to how her backyard drainage drains toward the lot with the second home. Ms. Callo stated she is concerned if they build the home her septic field will be destroyed. She stated she doesn't want to break his dreams but explained this home has been her dream for 20 years.

Minutes Acceptance: Minutes of Aug 7, 2018 7:00 PM (Approval of Minutes)

Mr. Hansen asked which direction it drains.
Ms. Callo stated it drains toward Glencoe Street and has pitched that way since she bought it.

Sworn in Mr. Peter Larson, 911 E. Glencoe Street Palatine, IL
Mr. Peter Larson asked about the 4-way stop sign at Leonard Road and Glencoe Street, and if both dwellings face Glencoe Street would it be closer to Leonard Road. He stated the sign has been there for years and many run through it. Mr. Peter Larson explained his concern is if the house is pushed out towards Leonard Road it will affect the stop sign.

Chairman Dwyer pointed out they are asking for a lot of variations and asked if they are necessary to make this work.
Ms. Romack explained though on paper the other subdivision didn't need the extra variations if they came through today they would be asking for similar relief.

Chairman Dwyer clarified the special use for setbacks were just because of the way the homes are positioned on the lot.
Ms. Romack answered yes and explained it is due to the legal front yard being on Leonard Road, but the proposed home would face Glencoe Street. Ms. Romack referred to the site plan slide showing the red dotted lines indicating how the homes could be built facing Leonard Road and be within code.

STAFF RECOMMENDATIONS:
The proposal is consistent with the Glencoe Corner Subdivision located directly east of the subject property. Additionally, the orientation of the proposed home on Lot 2 is such that its functioning front yard is Glencoe Street but the legal front yard is Leonard Road; therefore, requiring a Special Use for front and rear yard setbacks. With that being said, Staff recommends approval of the proposal, subject to the following conditions:

1. The development shall substantially conform to the Subdivision Plan prepared by Lambert and Associates and Land Technology dated 05/19/2018 last revised 07/02/2018 and the Lot 2 Site Plan prepared by Lambert and Associates and Land Technology dated 05/19/2018, last revised 07/02/2018, except as such plans may be revised to conform to Village Codes and Ordinances.
2. A Public Improvement letter of credit or appropriate security shall be submitted in a manner acceptable to the Village Engineer.
3. Review fees in the amount of 1.5% of the total project improvement costs (as defined in the Village Code) shall be submitted in a manner acceptable to the Village Engineer.
4. The Final Plat of Subdivision shall be submitted on Mylar and significantly conform to the Plat of Subdivision prepared by Lambert and Associates and Land Technology dated 07/03/2018 and attached hereto.
5. A Subdivision Improvement Agreement shall be submitted.

Minutes Acceptance: Minutes of Aug 7, 2018 7:00 PM (Approval of Minutes)

6. Recording fees in the amount of $300 shall be submitted.
7. The Engineer's Cost Estimate shall be revised in a manner acceptable to the Village Engineer.
8. Parkway trees shall be planted across the frontage at a spacing no greater than 40' on center in a manner acceptable to the Director of Planning and Zoning.
10. The Leonard Road parkway and culverts shall be graded and placed at an elevation that ensures drainage for the parkway and 2 lots to the north in a manner acceptable to the Village Engineer.

Mr. Hansen asked the Petitioner if they can and will comply with staff's conditions.
Mr. Connelly answered yes.

Mr. Kolososki spoke to the windows in the attic and asked if they are for possible future.
Mr. Connelly answered no explaining they are for decoration.

Ms. Williams made a motion to close the public hearing; seconded by Mr. Noonan.

DISCUSSION:
Chairman Dwyer spoke to the stop sign concerns. but stated he thinks that is just the way it is.

Mr. Kolososki stated a series of bushes would be more detrimental because you are still 30 feet off the road. He spoke to the neighbor's concern of water drainage and pointed out it will still flow in the same direction off her land.

Chairman Dwyer asked if it will still flow south.
Ms. Romack answered yes and explained the re-grading that is required.

Mr. Kolososki spoke potentially lower the pitch of the house to maybe help height concerns.

Mr. Hansen asked if the request is for the splitting of the land or for this particular plan.
Mr. Kolososki stated it is tied to this plan.

Chairman Dwyer stated they are requesting to change the zoning to R-2 so it would be able to do anything that is permissible to R-2 zoning.
Mr. Fedota clarified the board is voting on if it is an appropriate use of this land.
Chairman Dwyer answered correct explaining is dividing this corner lot into 2 lots is appropriate.

Mr. Friedman clarified the recommendations on the Special Uses will be for size and positioning of the house on Lot 2 as submitted.
Chairman Dwyer answered yes.

Minutes Acceptance: Minutes of Aug 7, 2018 7:00 PM (Approval of Minutes)

Mr. Fedota asked what the estimated aggregated lot coverage of the 2 buildings compared to existing lot coverage is.
Ms. Romack stated she does not have those numbers but pointed out they will have to follow the R-2 standards, if approved.

Mr. Fedota asked about what is the allowed percentage in the R-1.
Ms. Romack answered 30% building coverage and 35% lot coverage.

Mr. Fedota spoke to the loss of peculation related to coverage.

Ms. Romack stated if there is a concern with the height of the proposed home, then a condition can be added restricting it a single-story home.
Chairman Dwyer pointed out generally a two-story home would take up less ground space than a ranch.

Chairman Dwyer spoke to the streetscape concern.
Mr. Hansen asked if it would be consistent with the homes to the east on Glencoe Street.
Mr. Noonan pointed out looking at the aerial there is already inconsistency.
Mr. Fedota pointed out the other side of Leonard Road is also not consistent.

Ms. Romack explained Mr. Lange's concern is because the east side of Leonard Road line up very closely, while the proposed home on the west side of Leonard Road would be setback 20 feet instead of approximately 50 feet similar to the existing homes to the north.

Chairman Dwyer stated he doesn't like all the Variations but that is the trend.

Mr. Friedman stated it is interesting if you turn the same home the quantity of relief being sought goes down dramatically so the concern is not so much the massing or the size of it.

Chairman Dwyer asked if there is concern with the direction the homes are facing.

Mr. Friedman spoke to the change in the definition of the front yard causing it to be in this condition. He spoke to the Petitioner following the same setup as the homes to the east.

Discussion on which street the home faces and how affects the setbacks

Mr. Friedman spoke to the concerns on storm water control. He pointed out the plans submitted addressed this and the Village's Engineering Department will be taking a hard look before approving the plans so is comfortable that a subdivision like this can maintain the necessary drainage.

Ms. Williams made a motion to approve subject staff's conditions; seconded by Mr. Friedman.

Minutes Acceptance: Minutes of Aug 7, 2018 7:00 PM (Approval of Minutes)

RESULT:	**RECOMMENDED TO APPROVE [UNANIMOUS]**
MOVER:	Teri Williams, Plan Commissioner
SECONDER:	Eric Friedman, Plan Commissioner
AYES:	Hansen, Dwyer, Robins, Noonan, Williams, Friedman, Bettenhausen, Kolososki, Fedota

2. 1775, 1791, 1801, & 1815 N. Rand Road **- Recommended to Approve**

Chairman Dwyer read the notice of public hearing that was published in the Daily Herald on July 23, 2018 and mailed to the owners of the surrounding properties.

The following petitioner's exhibits were introduced:

1. Public Notice
2. Petition for Hearing
3. Proof of Ownership
4. Project Narrative (Petitioner)
5. Knuppers-Petitioner Narrative
6. Plat of Survey
7. Final Plat of Subdivision
8. Engineering Plans
9. Landscaping Plans
10. Site Plan
11. Trash Enclosure
12. Mazda Exterior Rendering/Elevations
13. Mazda Floor Plan
14. Subaru Exterior Rendering/Elevations
15. Subaru Floor Plan
16. Carwash Exterior Rendering, Floor Plan & Elevations
17. Sign Elevations & Location

Sworn in Ms. Megan Roche attorney for Roto Sales Inc Napletons Mazda and Subaru
Steve Napleton- Napleton Auto Group
Michael Mondus - Spaceco Inc.
Simon Yu - Simon Design Group

Ms. Roche, gave a brief overview of the request explaining that the petitioner is proposing purchasing two parcels of property. She stated the first is the Menards property from the Village of Palatine and second the Knuppers Garden Center. She stated they are currently doing business in Arlington Heights owning and managing 2 car dealerships and are proposing to relocate to the Village of Palatine. Ms. Roche explained the Mazda dealership would be approximately 17,000 sq.ft. and the Subaru would be approx. 25,000 sq.ft. and in addition there would be a free standing car wash. She also stated that the developer would initially leave the Knupper's property as is and manage the business. She stated in total it would be approximately 15 acres of property. She spoke to the Engineering and Architectural plans that were submitted and stated they have been working with Village for a redevelopment agreement.

Mr. Mondus engineer - Spaceo Inc. - 9575 Higgins Rd Rosemont, IL

Mr. Mondus stated that Spaceco Inc. is the civil engineering/ surveying firm working for Mr. Napleton. He stated most of the engineering plans have been

Minutes Acceptance: Minutes of Aug 7, 2018 7:00 PM (Approval of Minutes)

submitted and initially reviewed by staff. He stated they acknowledge and accept the conditions relative to those approvals. Mr. Mondus stated the property has Village utilities including sanitary, water and storm connections which allow the redevelopment of the property utilizing some of the existing infrastructure. He spoke to the site access explaining they are proposing to reuse the access point on Old Hicks Road and the 2 access points on Rand Road. Mr. Mondus stated they have to work with staff on delivery and fire turns, which will be resolved.

Mr. Simon Yu - Architect - Simon Design Group

Mr. Yu stated they are the architects for all three buildings. He gave a brief overview of the design explaining it is a classic Mazda design. He pointed out it is rare to have ground up building and this will include 2 ground up buildings. He spoke to materials referring to the slides. He stated they will use aluminum panels and the sides and rear will be concrete precast panels which is low maintenance. Mr. Yu stated the car wash will be single story building and will be a self-drive thru carwash.

Mr. Friedman asked if the car wash would be a standalone business or exclusively or primarily for the dealership.
Mr. Napleton explained it would be a $3 standalone carwash. He further explained the plan is to give some kind of a deal associated, when buying a car from the dealer. Mr. Napleton stated it will have a full conveyer with blowers and wax just like other freestanding carwashes.

Mr. Bettenhausen asked about the hours of the carwash.
Mr. Napleton stated they will have to check what hours the Village would allow but explained it would be within normal range of other carwashes in area being open 7 days a week.

Mr. Friedman spoke to the site design, sign placement and Village sign ordinance. He asked why they chose an EMB location so close to Culvers existing sign when they have such a large frontage.
Mr. Napleton explained it is the corner of the property. He pointed out the carwash is a substantial investment and since is located on Old Hicks rather than highly trafficked Rand he needs to bring customer traffic in so it doesn't make sense to have it further north. Mr. Napleton stated it is unfortunate to have a sign so close but are hoping to get the relief needed and make this a successful project.

Chairman Dwyer asked why there is a need for an EMB sign for a carwash.
Mr. Napleton explained it is a blended use sign and the EMB part of it is more for the car dealership.

Chairman Dwyer spoke to the possibility of having a regular sign on the corner for the carwash and having a separate sign for the dealer further down.
Mr. Napleton explained it is dual purpose in a high visible corner and thinks it works best on the corner to be most successful.

Minutes Acceptance: Minutes of Aug 7, 2018 7:00 PM (Approval of Minutes)

Mr. Vyverberg gave a brief overview of the request stating the Subject Property was previously occupied by the former Menard's store and lumber yard and Knupper nursery. After Menard's vacated this store location, the Village subsequently acquired the property. The Petitioner, ROTO Sales Inc. d/b/a Napleton Mazda Subaru, entered into discussions with the Village to acquire the former Menard's site. Separate from that process, the Petitioner reached an agreement with the Knupper's property owner to also acquire that site. The Petitioner intends to construct 2 separate auto dealerships, and a car wash building.

ANALYSIS:

Zoning and Site Design

The Subject property is approximately 15.25 acres and contains a vacant commercial building and an associated parking lots. The property is presently zoned Planned Development, which dates to its annexation in 1992, and is specific to the Menard's development and use. The Menard's buildings are approximately 103,000 square feet and the remainder of the property is improved with an existing parking lot.

The former Knupper property is located on the northwest side of the former Menard's property and consists of an approximately 15,100 square foot main building and a 9,000 square foot out-building.

The plans call for the demolition of the Menard's buildings and the main greenhouse building. Thereafter, the Petitioner is proposing to develop a Subaru dealership (24,900 square feet), a Mazda dealership (17,300 square feet), and a separate stand-alone car wash (5,200 square feet). Overall, there are 684 parking spaces provided for these uses. Collectively, the Zoning Ordinance requires 158 parking spaces for these uses (47,400 square feet @ 1 space/300 square feet). Many of the parking spaces are for the storage of additional auto inventory for the dealerships.

The proposed car wash is located in the southeast corner of the property and directly across from the Culver's restaurant. Although the car wash does not have a separate dedicated escape lane, the queue is exposed to both the parking lot and access drive. As the final architectural plans and elevations are not presented, the final car wash plan will require a separate site plan review with the Village Council to ensure that there are not any noise issues for the surrounding properties with the operation of the car wash. Also, the landscaping plans call for the existing landscaping and screening along Old Hicks Road and adjacent to the car wash to be maintained, in addition to the new landscaping and screening for the car wash property.

The proposed development would subdivide the property into separate commercial lots for each of the dealership properties and the car wash. While there is not a determined long range plan for the approximately 3.38 acres, representing a portion of the former Knupper property, Staff will recommend that

Minutes Acceptance: Minutes of Aug 7, 2018 7:00 PM (Approval of Minutes)

any re-use of that property shall adhere to the B-5 (Rand Road corridor) use lists. Initially, the Petitioner intends to operate a limited season flower sales' business from approximately April through July.

Traffic and Access

There are three separate access points to the site, which consists of two full access areas (northernmost along Rand Road - approximately 940 feet from the intersection - and along Old Hicks Road - approximately 240 feet from the intersection) and a right-in/right-out (approximately 340 feet from the intersection), also along Rand Road. All of these access points are existing and will be maintained for the new development.

Rand Road is an IDOT jurisdiction. The intersection of Rand Road and Old Hicks Road is fully signalized. Once the site is accessed, there are a series of internal and shared drive aisles, which traverse the site. Although there is internal site access, each of the uses has an associated parking area, within the proposed lots.

The site previously functioned with two commercial uses occupying approximately 127,000 square feet of buildings. The proposed development will be three initial commercial buildings, occupying 47,400 square feet. Through use of the existing access points and the shared internal drive aisles, with cross access, the site will accommodate the anticipated traffic accordingly.

Truck and delivery traffic should primarily access the site using the Rand Road access areas.

Engineering

As a developed site, this property has access to all of the necessary utilities and the proposed development will receive utility service through connections to existing structures. There is an approximate 20-foot grade differential down moving north to south on this site, with the low point terminating at the Old Hicks Road intersection.

Stormwater will be managed though the 4 separate detention basins spaced throughout the site. As is required, the basins will provide the necessary volume control and ultimately connect to the existing storm sewer system. Additionally, the plans call for the use of permeable pavers for several sections of the parking areas throughout the site.

The existing sidewalks will be maintained with this development. The Rand Road sidewalk is on private property and the plat will be revised to include an access easement for the sidewalk.

Architecture

The Napleton Mazda building will be 26 feet in height and the building materials consist of EIFS, metal panels, and a predominate window façade along Rand Road.

The Napleton Subaru building will be 28 feet in height and the building materials consist of a Subaru slate tower, metal panels, and concrete panels. There is

Minutes Acceptance: Minutes of Aug 7, 2018 7:00 PM (Approval of Minutes)

also a substantial window façade along the Rand Road frontage.

Signage

The development is proposing 4 freestanding signs:

- A 98 square foot Subaru sign (20 feet tall);
- A 100 square foot Mazda sign (20 feet tall);
- A 125 square foot Napleton sign (with a 50 square foot EMB sign) (25 feet tall);
- A proposed freestanding sign for the car wash.

The B-5 District - appropriate Rand Road zoning district for comparison would allow one sign per lot, with a maximum height of 25 feet and maximum size of 125 square feet.

Per the Zoning Ordinance, electronic message boards require Special Use review. The EMB portion cannot exceed 40% of the total sign area. The proposed EMB is 50 square feet and complies with that requirement. In addition to the operational controls (video display and scrolling is prohibited and a minimum hold time of 15 seconds is required), there is also a spacing distance of 500 feet between EMB signs. As proposed, the Napleton EMB is approximately 90 feet from the existing Culver's EMB sign to the south across Old Hicks Road. It is also taller than the Culver's sign to offset the potential for line of sight conflicts.

Business Operations

Napleton Mazda Subaru will employee initially 57 employees, which is anticipated to increase per the business plan. The dealerships will be open from 9 AM to 9 PM; Monday through Friday; and 9 AM to 6:30 PM on Saturday; and is closed on Sunday. The service department is open from 7 AM to 6 PM; Monday through Friday; and 8 AM to 5 PM; Saturday. It is also closed on Sunday.

Mr. Kolososki spoke to the retaining wall on Old Hicks Road and how the carwash will be higher and more visible. He asked if there are any grading plans to lower that section as far as elevation goes.

Mr. Vyverberg explained from a staff perspective a carwash is a special use in all the corridors. He stated staffs' concerns are related to noise, screening and impact to the surrounding properties. Mr. Vyverberg explained the petitioner has submitted a general site plan and elevations for discussion tonight. He further explained it will go through further review if they get approved. He stated as they get there plans together it will be reviewed and changes will be required to accommodate a car wash.

Mr. Kolososki expressed concern on landscaping that side of the project.

Mr. Fedota asked about the stacking for the car wash and the projected traffic patterns based on other carwash stacking.

Mr. Vyverberg explained they reviewed the traffic patterns. He stated there is not a dedicated escape plan with the car wash but pointed out the stacking is completely visible from the street side to anyone preparing to turn in as it relates to it. Mr. Vyverberg stated staff is not concerned with the numbers that can que pointing out there is enough room for 7 cars to stack. Mr. Vyverberg stated

Minutes Acceptance: Minutes of Aug 7, 2018 7:00 PM (Approval of Minutes)

because it is completely visible and not hidden staff is comfortable with proposal as it relates.

Chairman Dwyer asked if code requires an escape lane for a carwash or just for drive thrus Mr. Vyverberg explained the code would relate to it as it pertains to drive-thrus and is reviewed under special use. He spoke to other requests and conditions put in place.

Chairman Dwyer spoke to the turn on the north end pointing out it seems like a tight radius. He stated the plan he has is slightly different than the one on the screen.
Discussion on the difference in site plans
Mr. Vyverberg spoke to the site plans prepared by Spaceco explaining they have been reviewed by the Village Engineer and Director of Public Works and there was not a specific concern related to the turn radius.
Discussion on the difference between architectural and engineering site plans

Chairman Dwyer spoke to the increased traffic on Old Hicks Road and asked if it is up to the additional usage.
Mr. Vyverberg spoke to the condition for the proposed subdivision for an additional dedication of right of way. He pointed out there is an existing full access curb cut that was ultimately annexed from Cook County. He spoke to the annexation agreement that memorialized the use which still remains in place. Mr. Vyverberg stated as part of the review they did not receive feedback or comments relative to ant required upgrades relative to Old Hicks Road although as a component of the plat of subdivision is a dedication of right of way along Old Hicks Road.

Chairman Dwyer spoke to the parking and asked if they should include a condition requiring a certain amount of open parking spaces to allow customers a place to park.
Mr. Vyverberg spoke to the zoning parking requirements and other car dealers.

Sworn in Mr. Chris Tondola 1829 Laurel Palatine, IL
Mr. Tondola stated he is a former car wash owner and stated cars stack up quick. He expressed concern with the light being very long and when it does change it is very fast.
Mr. Tondola expressed concern with this increasing traffic for the residents that live there who are trying to get out. He stated he thinks the car wash and dealerships will be a hinderance on an already bad traffic area. He pointed out the area already has oil change places and other car washes. Mr. Tondola expressed concern with effect on property values

Sworn in Mr. Andrew Prociuk 1765 N. Lynda Palatine, IL
Mr. Prociuk stated the renderings are beautiful and is definitely an upgrade from Menards. He stated his original concern was with the EMB but the cap on the height eases some of the concerns. He expressed concern with light pollution from the car dealer. He stated he already has light from billboards shining in his

Minutes Acceptance: Minutes of Aug 7, 2018 7:00 PM (Approval of Minutes)

home at night. Mr. Prociuk agreed with the concern of increased traffic from the carwash and disagreed the traffic plans won't change. He agreed the traffic light is not great and thinks the stacking mentioned earlier will be a bigger issue. Mr. Prociuk spoke to the noise concern and stated he is in the landscaping business and no amount of trees or shrubs will screen the noise. He stated they want to enjoy their Sundays and Saturdays and are not thrilled with the weekend hours. He stated future resale of these homes is a concern.

Sworn in Ms. Janet Mulhausen 1735 N. Lynda Palatine, IL
Ms. Mulhausen expressed concern with the exit on Rand Road. She stated she lives in Capri Subdivision across the street and even though there is "No Turn" signage she was almost hit by a truck because they don't read the signs. Ms. Mulhausen pointed out there is no center lane only the four driving lanes. She stated she would like the exit onto Rand Road to be moved over because it is dangerous. She asked about the location of the repair part of the project.

Mr. Yu explained it will be on the top and left side referring to the floor plan slide.
Ms. Mulhausen expressed concern the noise of the drills. She stated she is also worried about the signage pointing out the Toyota complex lights up the sky. Ms. Mulhausen stated she hopes after close they would lower the lights and possibly aim the lights at the cars so the light pollution doesn't affect their yards

Mr. Yu addressed the concerns. He spoke to the access points on Rand Road being a right in and a right out and pointed out the main exit further down. He spoke to the noise of the brakes and hammers stating they are a lot quieter than they use to be. Mr. Yu spoke to the Village light pollution standard and hopes that alleviates some of the concerns.

Chairman Dwyer pointed out it is not always the light that overflows but rather the fact that there is a ball of light that comes from the dealer itself.

Mr. Fedota asked if there is a maximum light standard for parking lots
Mr. Vyverberg spoke to the commercial standards for foot candles at the property line and how it is calculated for properties approximate to residential areas. He spoke to the sign code and how it requires signs to be off at 11:00 pm and not be turned back on until 7:00 am., when a business is not in operation. Mr. Vyverberg spoke to the usage of sound amplification and pager systems in car dealers and how they cannot be audible from outside the property lines.

Mr. Napleton stated he is too cheap to keep the lights on all night long. He explained at 10:00 pm they will be turned down to security lights. He spoke to the stacking and escape plan pointing out it will be attended by an employee and will accommodate a 3 point turn to get out. Mr. Napleton explained the conveyer type system is able to service 80 cars an hour so will get the cars out quick.

Chairman Dwyer stated if the carwash is busy and successful it will block Old Hicks and prevent people from going north. He asked about the possibility of widening the road to the entrance.

Mr. Napleton stated there are plenty of carwashes in the area so can't imagine theirs exceeding the 80 cars an hour.

Chairman Dwyer pointed out the commercial property borders a lot of residential which will have an impact. He stated maybe the carwash shouldn't be on northeast.
Mr. Napleton pointed out the building that is currently there is nasty looking and they are proposing to put top of the line buildings in an 18 million dollar investment.

Mr. Bettenhausen asked if there will there be 2 rows of cars for carwash.
Mr. Napleton answered yes and will include free vacuum stations. He stated they will need to keep things moving. Mr. Napleton stated the final design will have a softer radius because the building went down approx. 1,000 sq. ft.

Chairman Dwyer asked if a traffic study is required.
Mr. Vyverberg explained since all access points were not changing staff did not see the need to require an additional traffic study.

Chairman Dwyer asked how this traffic compares to Menards and Knuppers back when Menards was in operation.
Mr. Vyverberg explained in review staff came to the conclusion it did not require an additional traffic study.

Mr. Hansen asked about the comments about keeping Knupper's open.
Mr. Napleton stated Knuppers has been quite successful for the past 80 years. He stated they originally only wanted the Menards the project but it didn't fit. He stated the main showroom will be gone but will be open as a seasonal business April- July as kind of a tent structure.

Mr. Hansen clarified it won't be a vacant building.
Mr. Napleton explained the plan is to be busy for 4 months of the year and then vacant for the other 8 months. He spoke to the cleanup plans of the property and what buildings will remain.

Chairman Dwyer suggested maybe it can remain open in November and December for Christmas trees.
Mr. Napleton stated it is a possibility if they can find someone who would be interested. He stated maybe Knights of Columbus or another charity.

Mr. Tondola expressed concern with the noise from the carwash vacuums when they are self-serve and running all together. He stated the impact wrenches are even louder than they used to be. Chris stated the noise level will be increased.

Sworn in Mr. Musa Dabeca 645 E. Diane Drive
Mr. stated he built his home in 1991 and has no objections with the dealerships but expressed concern with the carwash. He stated he lives in the best subdivision in the Village of Palatine. He expressed concerns that it will attract

Minutes Acceptance: Minutes of Aug 7, 2018 7:00 PM (Approval of Minutes)

kids with loud music. He stated he pays top taxes and has been there for 30 years and thinks this will attract unbelievable noise. He spoke to people testing cars from the Toyota dealer right in front of his house and now will have two more dealers that will add to the safety concern for his grandchildren.

STAFF RECOMMENDATIONS:

The legislative intent for the B-5 district indicates that the use intention is to "…provide for intensive retail or wholesale sales with appeal on a regional basis." Auto-related uses are anticipated and typical uses along the Rand Road corridor. There have been several such new developments over the last 10 years. Also, the previous uses on the subject property were also larger commercial uses, with a regional draw.

The uses are appropriate for the Rand Road corridor. And, the proposed development plan integrates the uses into the existing property and provides shared access in the same manner as the previous commercial uses. Therefore, Staff recommends approval, subject to the following conditions:

1. An auto-turn plan exhibit shall be submitted in a manner acceptable to the Village of Palatine. This shall include both the Fire Department and truck delivery requirements for the site.
2. The Plat of Subdivision shall be revised in a manner acceptable to the Village Engineer and Village Attorney to ensure that necessary watermain and sanitary sewer easements are appropriately dedicated to the Village. The storm sewers and detention basins should remain private and an association shall be created to ensure their maintenance and functionality.
3. The declarations shall be prepared in a manner acceptable to the Village Attorney to also include a cross access and shared parking easement a maintenance agreement.
4. An easement will be required for the public sidewalk and watermain along Rand Road. The public sidewalk at the entrances shall be upgraded to meet the ADA requirements.
5. The final signs plans shall be revised in a manner acceptable to the Village of Palatine. Any sign encroachment over the watermain or public walk shall be revised to avoid this conflict.
6. All future uses shall follow the B-5 district use lists. A separate business and maintenance plan for the 3.88 acre parcel on the northern edge of the property shall be revised in a manner acceptable to the Village of Palatine. This should include the interim maintenance of the property and future compliance with Village Codes, related to any reuse of the property.
7. The final landscaping and screening plan shall be revised in a manner acceptable to the Director of Planning and Zoning and shall include additional parkway trees and parking lot landscaping.
8. The Village Council shall review final architectural and site plan for the car wash and the building materials shall coordinate with the dealership buildings.

Minutes Acceptance: Minutes of Aug 7, 2018 7:00 PM (Approval of Minutes)

9. The final engineering plans, prepared by SPACECO, initially dated 06/01/18, shall be revised in a manner acceptable to the Village Engineer. The revisions shall include the Engineers Estimate of Probable Cost. The revised engineering plans should also properly address any required abandonment of the utilities, resulting from the demolished buildings.
10. The final lighting and photometric plans shall be revised in a manner acceptable to the Village Engineer.
11. All outside permits, including MWRD, IDOT, NPDES, and IEPA will be required.
12. All rooftop equipment shall be 100% screened on all sides in a manner acceptable to the Village of Palatine.
13. The final refuse areas shall be submitted in a manner acceptable to the Director of Community Services.
14. A Public Improvement letter of credit shall be submitted in a manner acceptable to the Village of Palatine.
15. A Planned Development letter of credit shall be submitted in a manner acceptable to the Village of Palatine.
16. Plan review fees based upon 1.5% of the total improvement costs (as defined in the Village Code) shall be submitted in a manner acceptable to the Village.
17. Recording fees shall be submitted in a manner acceptable to the Village.

Mr. Hansen asked about condition #5 and if that meant to imply the plans are currently not acceptable.
Mr. Vyverberg explained it is standard because the proximity of the EMB sign is seen by staff as a policy decision for Village Council so staff took a neutral position as it relates to it. He stated the reason for #5 is a previous iteration showed conflict that needs to be revised in the water main and the public walk for the sign plans and want to ensure they are revised accordingly.

Mr. Noonan asked Mr. Napleton about reports from the local newspapers that if this process moves forward they would approach Cook County for some tax rebates.
Mr. Napleton explained Cook County real estate taxes are extremely high for car dealers. He stated they have asked for 7C relief which discounts are approximately half and stated they do not plan on closing on property unless they get that. Mr. Napleton explained the relief can be up to 10 years on projects that are in that kind of circumstances. He stated they expect Cook County will approve, but first the Village has to endorse it.

Mr. Noonan expressed concern if approved that they will then hire out of state contractors. He asked if Mr. Napleton would be willing to verbally agree to hire local contractors.
Chairman Dwyer stated that is out of our scope.
Mr. Vyverberg agreed with Chairman Dwyer that it is outside of the scope of the land use discussion and that the Petitioner does not have to address that question.

Minutes Acceptance: Minutes of Aug 7, 2018 7:00 PM (Approval of Minutes)

Mr. Napleton stated they have not chosen the contractors yet and they will be chosen based on qualifications and price. He pointed out a Wisconsin contractor constructed the new Village hall. He stated chances are they will go with an Illinois contractor but can't guarantee.

Mr. Bettenhausen asked if they could consider an updated traffic study.
Mr. Vyverberg stated if the Plan Commission would like to add a condition for a traffic study or traffic report they can but in initial review which included the Village Engineer, Planning and Zoning, Community Services, Public Works, Police and Fire, it was not something that came forward as a requirement, as it relates to the site.

Mr. Hansen asked Mr. Napleton if he can and will meet all conditions.
Mr. Napleton answered yes.

Mr. Noonan made a motion to close the public hearing seconded by Mr. Hansen.

DELIBERATIONS:

Mr. Noonan stated he is not keen on the car wash. He stated the car dealer is a great use and great revenue and the plans look fantastic, but is not sold on the carwash.

Chairman Dwyer agreed with Mr. Noonan on the carwash in its current location.
Discussion on moving to northwest side of property and how it may alleviate some of the concerns.

Chairman Dwyer stated the board can add a condition to move the carwash to the west side of property. He pointed out though it is a commercial corridor a good chunk of the property abuts residential properties.

Mr. Kolososki agreed with moving the carwash stating it is too close to the residential neighborhood and with it being elevated higher than the street it will be very visible

Mr. Friedman asked how to address concerns when the request is for preliminary and final.
Chairman Dwyer explained the ability to add conditions to resolve concern with the message board being 50 ft. from another message board.
Discussion on alternative location of EMB.

Mr. Fedota spoke to the concerns.
Mr. Friedman pointed out the condition says the photometric plan would be revised but he stated he didn't have one in his packet.
Discussion on photometric plan and maximum light level.

Minutes Acceptance: Minutes of Aug 7, 2018 7:00 PM (Approval of Minutes)

Chairman Dwyer stated the board can leave some items as policy decisions for council or if someone feels strongly enough about the car wash or EMB they should be added into the recommendation.

Mr. Friedman expressed concern with the language of the recommendations being the approval would require substantial changes.

Discussion on recommending approval with changes or recommending denial.

Chairman Dwyer suggested approval subject staffs' 17 conditions plus #18 moving carwash to west side and #18 the EMB moved at least 300 ft. from existing.

Mr. Fedota made a motion to approve subject staffs' 17 conditions with the addition of #18 relocation of carwash to the west/northwest portion of property #19 to move the EMB west along Rand Road to maximize the distance to other EMB in the area and to properly identify the car wash to the possible relocation and #20 to reevaluate the lighting relative to directionality and glare of the light in a manner that is acceptable to the Planning and Zoning Department; Seconded by Mr. Noonan.

Mr. Vyverberg asked if the second condition is to move the EMB 300ft.
Mr. Fedota stated he didn't give a distance but will make condition #19 to a minimum of 300 ft.

Eric asked about the direction for the carwash location and the EMB and if they both should be northwest.
Discussion on verbiage used for direction.

Mr. Vyverberg stated this item will tentatively to go Council on August 20, 2018.

RESULT:	**RECOMMENDED TO APPROVE [UNANIMOUS]**
MOVER:	Stephen Fedota, Plan Commissioner
SECONDER:	Patrick Noonan, Plan Commissioner
AYES:	Hansen, Dwyer, Robins, Noonan, Williams, Friedman, Bettenhausen, Kolososki, Fedota

Minutes Acceptance: Minutes of Aug 7, 2018 7:00 PM (Approval of Minutes)

IV. COMMUNICATIONS

Ms. Romack indicated that there will be 2 items on the next Plan Commission hearing. This includes Hicks and Garden and a 4-lot subdivision on Hillside Street. The next Plan Commission meeting is scheduled for Tuesday, August 21st.

V. ADJOURNMENT

Mr. Fedota made a motion to adjourn; seconded by Mr. Noonan. The meeting was adjourned at 8:56 PM.

Minutes Acceptance: Minutes of Aug 7, 2018 7:00 PM (Approval of Minutes)

VILLAGE OF PALATINE
Plan Commission

SCHEDULED 08/21/18 07:00 PM

CASE STAFF STATEMENT (ID # 4677)

833 W. Hillside Street

CASE NUMBER: 18-67

PETITIONER: Greg Rose - KF Walter Homes, Inc.

LOCATION: 833 W. Hillside Street (and the vacant lot directly west of 833 W. Hillside Street)

PROPOSAL:

1. Preliminary and Final Plat of Subdivision to permit a 4-lot single-family residential development
2. Rezoning from R-1 Single-Family Residential to R-2 Single-Family Residential
3. Variation to permit a lot width of 74 feet for Lot 3 instead of the minimum required 75 feet

ZONING AND LAND USE: R-1 Single Family Residential

SURROUNDING CONDITIONS:

North:	R-1 Single-Family Residential
South:	R-1 Single-Family Residential / R-2 Single-Family Residential
East:	R-1 Single-Family Residential / R-2 Single-Family Residential
West:	R-1 Single-Family Residential

COMPREHENSIVE PLAN: Single-Family Residential (current and future)

BACKGROUND:

The Subject Property, approximately 0.91 acres, is two vacant single-family residential lots. The applicant and contract purchaser is seeking to rezone the subject properties from R-1 to R-2 and subdivide each lot into 2 separate lots (for a total of 4 lots). Additionally, one of the four lots (Lot 3) requires a Variation to permit a lot width of 74 feet instead of the minimum required 75 feet. Therefore, the Petitioner is seeking approval of the following:

1. **Preliminary and Final Plat of Subdivision to permit a 4-lot single-family residential development**

2. **Rezoning from R-1 Single-Family Residential to R-2 Single-Family Residential**

3. **Variation to permit a lot width of 74 feet for Lot 3 instead of the minimum required 75 feet**

ANALYSIS:

Zoning and Site Design

- The properties are currently zoned R-1 and contains 2 vacant lots (approximately 20,000 square feet each).
- The proposal would allow for 4 new lots with the planned construction for 4 new single-family homes.
- Lot 3 requires a Variation for a lot width of 74 feet instead of the minimum required 75 feet. Aside from the requested lot width reduction for Lot 3, all other setbacks and bulk restrictions would conform to the R-2 zoning requirements.
- The following tables provides an analysis of the proposed lots:

	Lot Size (9,000 sq. ft. required)	**Lot Width** (75' required)	**Lot Depth** (110' required)
Lot 1	9,904 sq. ft.	75'	132'
Lot 2	9,902 sq. ft.	75'	132'
Lot 3	9,907 sq. ft.	74.88'	132'
Lot 4	9,894 sq. ft.	75'	132'

- Properties northwest of the subject site remain mostly R-1 zoning with larger lots (approximately 20,000 square feet). Recent developments to the south and southwest have been rezoned to R-2 with lot sizes that generally range from 9,000-11,000 square feet. Properties on the east side of Quentin Road are mostly R-2 with similar lot sizes to the proposed development.
- Recent developments in the surrounding area include, but are not limited to, the following:
    - 2010 - Kenilworth Estates Subdivision, located at the northeast corner of Crescent Avenue and Kenilworth Avenue, received approval for a 2-lot subdivision, rezoning from R-1 to R-2, and additional relief for lot

width and setbacks.

- 2006 - Lillian Place Subdivision, located at the southeast corner of Crescent Avenue and Kenilworth Avenue, received approval for a 2-lot subdivision, rezoning from R-1 to R-2, and additional relief for lot width.
- 2005 - Brookside Hill Subdivision, located near the northwest corner of Brookside Street and Quentin Road, received approval for a 2-lot subdivision and rezoning from R-1 to R-2.
- 2004 - Brookside Resubdivision, located directly west of Brookside Hill Subdivision, received approval for a 2-lot subdivision and rezoning from R-1 to R-2.

- Additionally, the subject properties are located within Sub-Area “A”. This section of Sub-Area “A” shall be designed for lot sizes with a minimum of 9,000 square feet for interior lots.

Engineering

- Sanitary sewer will be extended to connect to existing services at the corner of Hillside Street and Quentin Road.
- Water will be extended to connect to existing services at the northwest corner of Crescent Avenue and Hillside Street. The Petitioner would be eligible for a recapture for the water main extension.
- The existing storm sewer behind Lots 1 & 2 shall be extended to the parkway terminating with a catch basin. The Petitioner would pay cash-in-lieu of detention, which is consistent with recent developments in the surrounding area (Kenilworth Estates Subdivision, Lillian Place Subdivision, Brookside Resubdivision, and Brookside Hill Subdivision).
- Sidewalks shall be constructed along the frontage of each lot. Parkway trees would be planted in accordance with Code.
- Two new hydrants will be installed on the north side of Hillside Avenue.

RECOMMENDATIONS:

While several of the immediately adjacent properties remain R-1 zoning with larger lots, the proposal is consistent with recent developments in the area. Additionally, the subject

properties are located within Sub-Area “A”, which recommends that new subdivisions are designed with lot sizes of at least 9,000 square feet for interior lots. With that being said, Staff recommends approval of the proposal, subject to the following conditions:

1. The development shall substantially conform to the Plat of Subdivision by Spies & Associates, Inc. dated 06/11/2018 and the Engineering Plans by Spies & Associates, Inc. dated 06/06/2018 last revised 07/18/2018, except as such plans may be revised to conform to Village Codes and Ordinances.
2. A Public Improvement letter of credit or appropriate security shall be submitted in a manner acceptable to the Village Engineer.
3. Review fees in the amount of 1.5% of the total project improvement costs (as defined in the Village Code) shall be submitted in a manner acceptable to the Village Engineer.
4. The Final Plat of Subdivision shall be submitted on Mylar and significantly conform to the Plat of Subdivision prepared by Spies and Associates, Inc. dated 06/06/2018 and attached hereto.
5. A Subdivision Improvement Agreement shall be submitted.
6. Recording fees in the amount of $300 shall be submitted.
7. The Final Engineering Plans and Final Engineer’s Cost Estimate shall be revised in a manner acceptable to the Village Engineer.
8. Cash-in-lieu of detention shall be submitted in a manner acceptable to the Village Engineer.
9. Sidewalks shall be installed in a manner acceptable to the Village Engineer.
10. Parkway trees shall be planted across the frontage at a spacing no greater than 40’ on center in a manner acceptable to the Director of Planning and Zoning.
11. Parkway trees and B-boxes shall be relocated out of the public sidewalk in a manner acceptable to the Village Engineer.
12. The ditch line shall be regraded in a manner acceptable to the Village Engineer.
13. Culverts with flared end sections are required in a manner acceptable to the Village Engineer.

14. The storm sewer behind Lots 1 & 2 shall be extended to the parkway terminating with a catch basin in a manner acceptable to the Village Engineer.

15. The water main extension is eligible for recapture. The developer will need to submit an intent to recapture in writing before construction begins in a manner acceptable to the Village Engineer, pursuant to Section 9.04 of Appendix B.

16. Fire hydrants shall be installed in a location and manner acceptable to the Fire Marshal.

17. The monotony code shall apply.

18. Given the proximity to Quentin Road, a construction schedule and parking plan for contractors and material haulers shall be submitted in a manner acceptable to the Village of Palatine prior to the issuance of a building permit.

19. MWRD WMO, IEPA Water Construction, and Cook County Department of Transportation ROW permits shall be submitted in a manner acceptable to the Village Engineer.

ATTACHMENTS:

- Applications 833 W. Hillside
- Aerial 833 W. Hillside Street
- Plat of Survey
- Plat of Subdivision 833 W. Hillside Street
- ENG Plans 833 W. Hillside Street
- Elevations 833 W. Hillside Street
- Public Notice 833 W. Hillside Street

VILLAGE OF PALATINE

PRELIMINARY & FINAL PLAT OF SUBDIVISION

Department of Planning & Zoning
200 E. Wood Street · Palatine, IL · 60067-5339
Telephone: (847) 359-9047 · Fax (847) 963-6247
www.palatine.il.us

Office Use Only		
	Project Planner: KR	Zoning Case #: 18-67
	Filing Fee	Notification Deadline
	PC Public Hearing Date: 8/21/18	Village Council Date

RECEIVED JUN 19 2018 PLANNING & ZONING DEPARTMENT
date received

PLEASE TYPE OR PRINT IN INK:

1. Name of Petitioner(s): KF Walter Inc.
2. Authorized Agent of Petitioner (if different):
   Name: _____
   Address: _____
   Telephone No. _____ Business No. _____
   Email: _____
   Relationship to Petitioner: _____
3. Property Interest of Petitioner(s): Contract Purchaser
   Owner, Lessee, Contract Purchaser, etc.
4. Address of the property for which this application is being filed:
   833 W. Hillside (02-21-211-003-0000); 848 Wkenilworth (02-21-211-003-
5. All existing land use(s) on the property are: Residential
6. The proposed use(s) on the property, if this petition is approved is (are): Residential
7. Current zoning of property: R-1 Size of the property: .91 acres
8. State the specific action requested: Subdivide both properties into 2 lots (4 total). Obtain R-2 zoning for properties.

Attachment: Applications 833 W. Hillside (833 W. Hillside Street - 4-lot subdivision)

VILLAGE OF PALATINE

REZONING

Department of Planning & Zoning
200 E. Wood Street · Palatine, IL · 60067-5339
Telephone: (847) 359-9047 · Fax (847) 963-6247
www.palatine.il.us

Office Use Only	Project Planner	Zoning Case #
	KR	18-67
	Filing Fee	Notification Deadline

RECEIVED
JUN 19 2018
PLANNING & ZONING DEPARTMENT
Date Received

PLEASE TYPE OR PRINT IN INK:

1. Name of Petitioner(s): KF Walter Inc.

2. Authorized Agent of Petitioner (if different):

   Name: _____

   Address: _____

   Telephone No. _____ Business No. _____

   Relationship to Petitioner: _____

3. Property Interest of Petitioner(s): Contract Purchaser
   Owner, Lessee, Contract Purchaser, etc.

4. Address of the property for which this application is being filed:
   833 W Hillside; 848 W. Kenilworth

5. This petition is for: (check one)

   ✓ Rezoning of currently incorporated property (within Village limits)

   ____ Rezoning of currently unincorporated property, in conjunction with annexation

6. All existing land use(s) on the property are: Residential

7. The proposed use(s) on the property, if this petition is approved is (are): Residential

8. Current zoning of property: R-1 Size of the Property: .91 acres

9. Proposed new zoning classification: R-2

Attachment: Applications 833 W. Hillside (833 W. Hillside Street - 4-lot subdivision)

PETITIONER JUSTIFICATION:

The Petitioner is required to present specific evidence, not opinions, to justify the proposed rezoning. Please respond to the following questions, attaching a separate sheet if necessary:

10. Describe why the subject property cannot be reasonably developed in accordance with the existing zoning classification.

11. Is the proposed zoning classification similar to or harmonious with the existing zoning of surrounding properties? Explain.

Many subdivisions of the same nature have occured in this area. It is part of Palatines development program.

12. Does the proposed zoning classification conflict with the Village's Comprehensive Plan? Explain.

YES.

13. Will any of the uses permitted under the proposed zoning classification have an injurious effect on the value and/or the use and enjoyment of surrounding properties?

No

Attachment: Applications 833 W. Hillside (833 W. Hillside Street - 4-lot subdivision)

833 W. Hillside Street

Attachment: Aerial 833 W. Hillside Street (833 W. Hillside Street - 4-lot subdivision)

PLAT OF SURVEY

MORRISON SURVEYING CO., INC.
2710 N IL Rt 47, Morris, Illinois 60450

LOTS 9 & 10 IN ARTHUR T. MCINTOSH & CO.'S PALATINE HILLS, A SUBDIVISION OF PART OF THE EAST HALF OF THE NORTHEAST ¼ OF SECTION 21, TOWNSHIP 42 NORTH, RANGE 10 EAST OF THE THIRD PRINCIPAL MERIDIAN, AS RECORDED ON FEBRUARY 15, 1928 AS DOCUMENT NUMBER 392915, ALL IN COOK COUNTY, ILLINOIS.

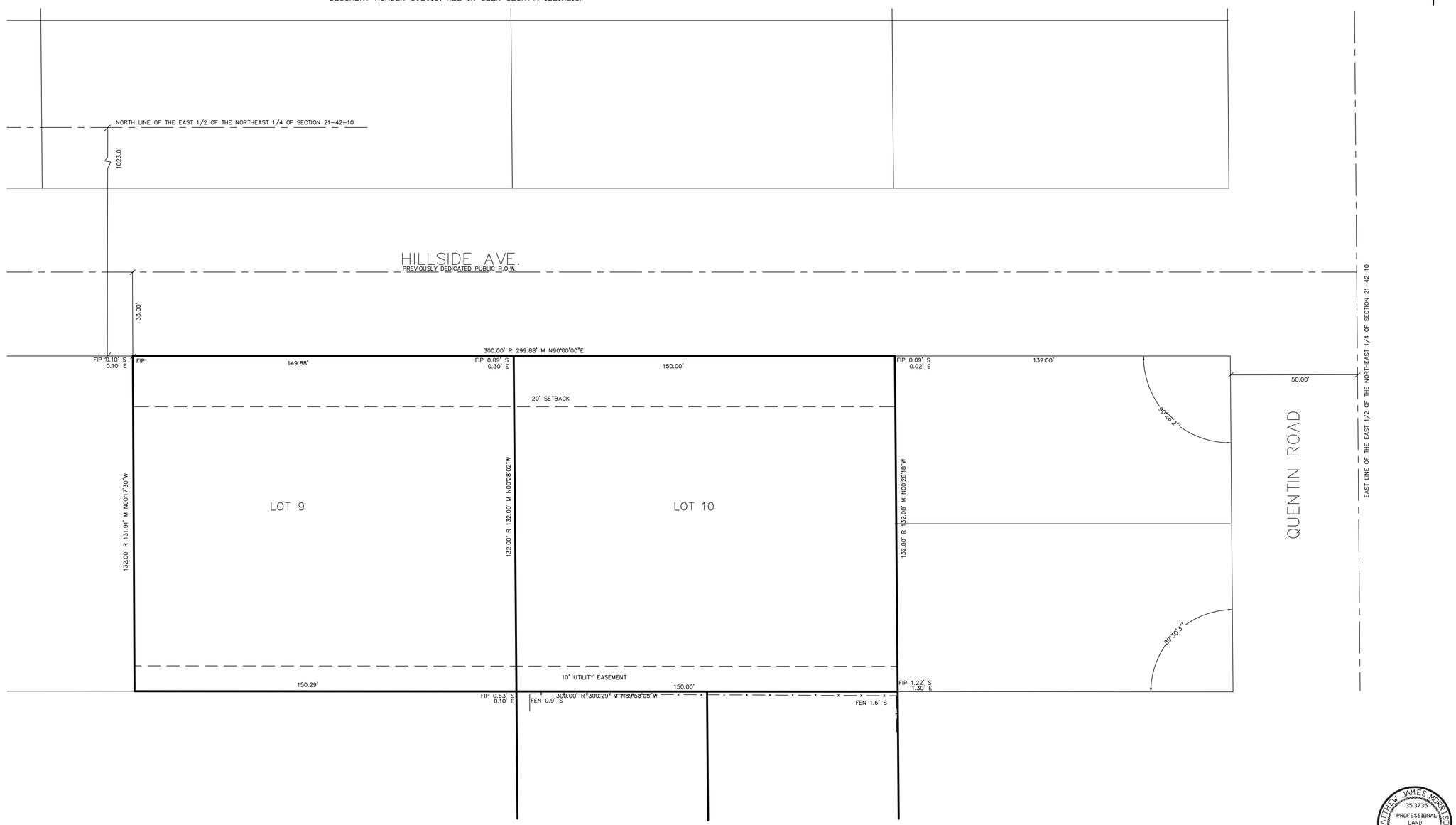

State of Illinois
County of Grundy }

We, MORRISON SURVEYING CO INC., (PDF License #184-003915) do hereby certify that we have surveyed the property described in the caption to the plat hereon drawn and that this professional service conforms to the current Illinois minimum standards for a boundary survey. All dimensions are in feet and decimal parts of a foot and are correct at a temperature of 68 degrees farenheight. Dimensions shown on buildings are to the outside of buildings.
Given under my hand and seal at Morris, Illinois.

Date: 06-11-18

MATTHEW JAMES MORRISON 35.3735 PROFESSIONAL LAND SURVEYOR STATE OF ILLINOIS MORRIS, IL

ILLINOIS PROFESSIONAL LAND SURVEYOR NO. 35-3735 License Expires 11/30/18

SPIES & ASSOCIATES, INC.
Civil Engineers – Land Surveyors
534 WEST CAMPUS DRIVE
ARLINGTON HEIGHTS, ILLINOIS 60004
PH 847.577.8808 FAX 847.577.0229

REVISIONS

DRAWN BY: TJS	JOB NO. 5144
DESIGNED BY: TJS	SCALE: 1"=20'
CHECKED BY: mtm	DATE: 06-11-18

BOUNDARY SURVEY
HILLSIDE SUBDIVISION

SHEET NO. 1 OF 1 SHEETS

Attachment: Plat of Survey (833 W. Hillside Street - 4-lot subdivision)

PLAT OF SUBDIVISION OF HILLSIDE SUBDIVISION

MORRISON SURVEYING CO., INC.
2710 N IL Rt 47, Morris, Illinois 60450

A SUBDIVISION OF LOTS 9 & 10 IN ARTHUR T. MCINTOSH & CO.'S PALATINE HILLS, A SUBDIVISION OF PART OF THE EAST HALF OF THE NORTHEAST ¼ OF SECTION 21, TOWNSHIP 42 NORTH, RANGE 10 EAST OF THE THIRD PRINCIPAL MERIDIAN, AS RECORDED ON FEBRUARY 15, 1928 AS DOCUMENT NUMBER 392915, ALL IN COOK COUNTY, ILLINOIS.

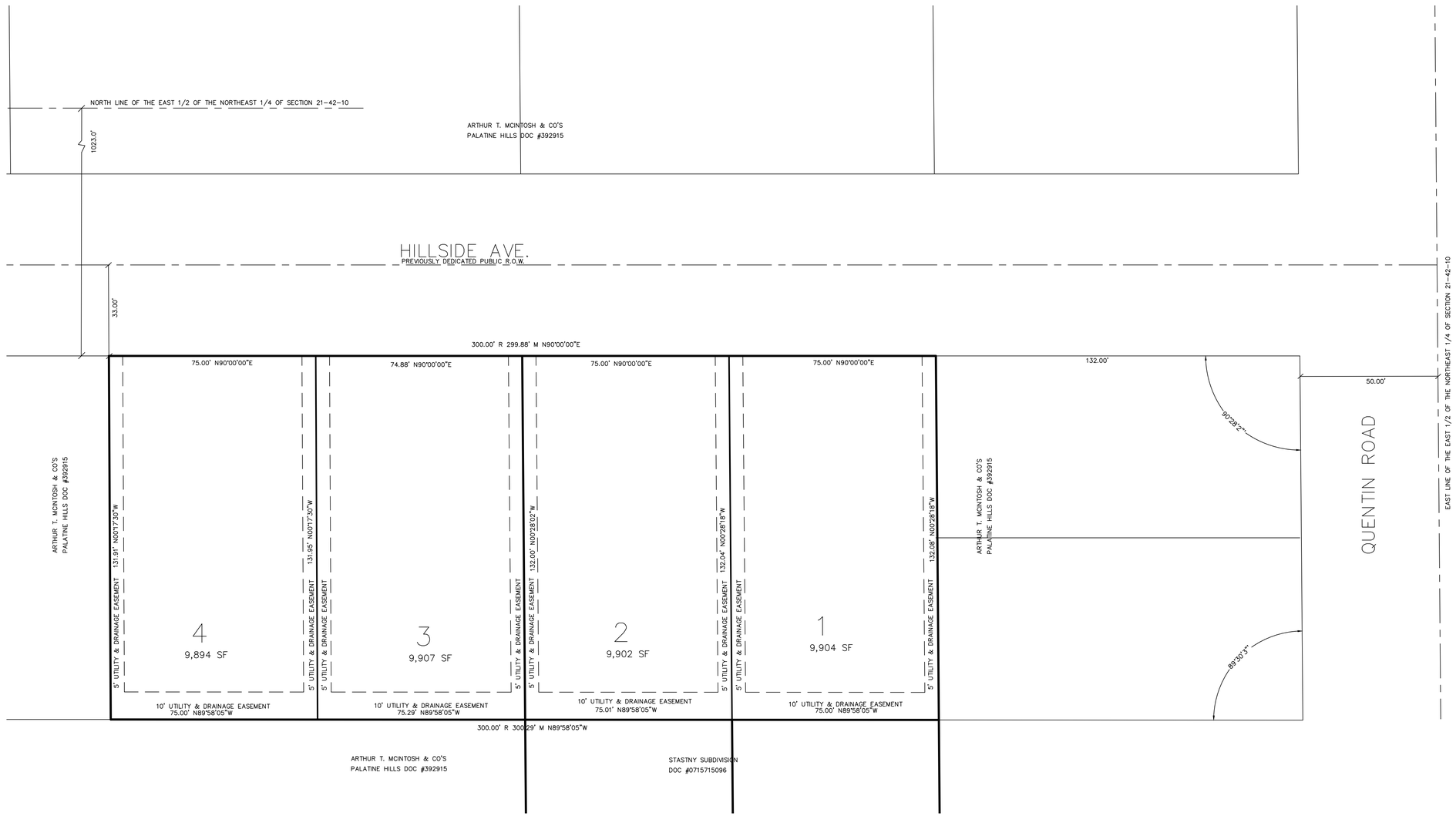

SPIES & ASSOCIATES, INC.
Civil Engineers – Land Surveyors
534 WEST CAMPUS DRIVE
ARLINGTON HEIGHTS, ILLINOIS 60004
PH 847.577.8808 FAX 847.577.0229

REVISIONS

DRAWN BY: TJS	JOB NO. 5144
DESIGNED BY: TJS	SCALE: 1"=20'
CHECKED BY: MJM	DATE: 06-11-18

FINAL PLAT OF SUBDIVISION
HILLSIDE SUBDIVISION

SHEET NO. 1 OF 2 SHEETS

Attachment: Plat of Subdivision 833 W. Hillside Street (833 W. Hillside Street - 4-lot subdivision)

PLAT OF SUBDIVISION
HILLSIDE SUBDIVISION

MORRISON SURVEYING CO., INC.
2710 N IL Rt 47, Morris, Illinois 60450

EASEMENT LANGUAGE

VILLAGE OF PALATINE EASEMENT

WHENEVER THE WORDS "PUBLIC UTILITIES" OR "PUBLIC UTILITIES EASEMENT" SHALL BE APPEAR ON THIS PLAT THE VILLAGE OF PALATINE, A MUNICIPAL CORPORATION, COOK COUNTY, ILLINOIS,M AND ITS SUCCESSORS OR ASSIGNS JOINTLY AND SEVERALLY SHALL HOLD A PERPETUAL EASEMENT UNDER, OVER AND ACROSS THE SURFACE OF THE PROPERTY SHOWN WITHIN THE LINES OF THE PLAT MARKED AS SUCH FOR THE INSTALLATION, CONSTRUCTION, USE, REPAIR AND MAINTENANCE OF ALL PUBLIC UTILITY EQUIPMENT INCLUDING BUT NOT LIMITED TO FACILITIES USED IN CONNECTION WITH THE TRANSMISSION AND DISTRIBUTION OF ELECTRICITY AND SOUNDS AND SIGNALS, WATER MAINS (INCLUDING "B" BOXES), SEWAGE MAINS AND PIPING, THE RIGHT TO CUT, TRIM OR REMOVE TREES, BUSHES AND ROOTS, AS MAY BE REASONABLY REQUIRED INCIDENT TO THE RIGHTS HEREIN GIVEN, AND THE RIGHT TO ENTER UPON THE SUBDIVIDED PROPERTY FOR ALL SUCH PURPOSES. OBSTRUCTION SHALL NOT BE PLACED OVER GRANTEES FACILITIES OR IN, UPON OR OVER THE PROPERTY WITHIN THE LINES MARKED "EASEMENT" WITHOUT THE PRIOR WRITTEN CONSENT OF THE GRANTEES, PROVIDED, HOWEVER THAT SUCH CONSENT OF THE GRANTEE SHALL NOT RELIEVE THE GRANTORS, THEIR SUCCESORS OR ASSIGNS FROM THE DUTY AND OBLIGATION TO REMOVE SUCH OBSTRUCTIONS AT THIER SOLE EXPENSE UPON THE DIRECTION OF THE GRANTEE, WHENEVER THE GRANTEE DEEMS SUCH REMOVAL NECESSARY IN ITS SOLE JUDGEMENT TO ENABLE THE GRANTEE TO REPAIR OR MAINTAIN ANY FACILITIES WITHIN THE EASEMENT OR OTHERWISE ALLOW THE GRANTEE FULL USE AND ENJOYMENT OF THE EASEMENT RIGHTS GRANTED HEREUNDER, AFTER INSTALLATION OF ANY SUCH FACILITIES. THE GRADE OF THE SUBDIVIDED PROPERTY SHALL NOT BE ALTERED IN A MANNER SO AS TO UNREASONABLY INTERFERE WITH THE PROPER OPERATION AND MAINTENANCE THEREOF.

ELECTRIC AND TELEPHONE

A PERMANENT, NONEXCLUSIVE EASEMENT FOR SERVING THE SUBDIVISION AND OTHER PROPERTY WITH ELECTRIC AND COMMUNICATION SERVICE IS RESERVED FOR AND GRANTED TO ANY ELECTRIC, TELEPHONE AND/OR COMMUNICATION COMPANY AUTHORIZED BY THE VILLAGE (REFERRED TO AS "GRANTEES"), JOINTLY AND SEVERALLY, TO INSTALL, OPERATE, MAINTAIN AND REMOVE, FROM TIME TO TIME, FACILITIES USED IN CONNECTION WITH UNDERGROUND TRANSMISSION AND DISTRIBUTION OF ELECTRICITY AND SOUNDS AND SIGNALS IN, UNDER, ACROSS, ALONG AND UPON THE SURFACE OF THE PROPERTY KNOWN AS AND/OR LABELED AS UTILITY EASEMENT, DRAINAGE AND UTILITY EASEMENT, OR UTILITY AND LANDSCAPING EASEMENT WITHIN DASHED LINES ON THE ATTACHED PLAT OF SUBDIVISION AND PROPERTY DESIGNATED ON THE PLAT FOR STREETS AND ALLEYS, TOGETHER WITH THE RIGHT TO INSTALL REQUIRED SERVICE CONNECTIONS UNDER THE SURFACE OF EACH LOT TO SERVE IMPROVEMENTS THEREON; THE RIGHT TO CUT, TRIM OR REMOVE TREES, BUSHES AND ROOTS AS MAY BE REASONABLY REQUIRED INCIDENT TO THE RIGHTS GIVEN IN THIS SECTION; AND THE RIGHT TO ENTER UPON THE SUBDIVIDED PROPERTY FOR ALL SUCH PURPOSES. OBSTRUCTIONS SHALL NOT BE PLACED OVER THE GRANTEES' FACILITIES OR IN, UPON OR OVER SUCH EASEMENTS WITHOUT PRIOR WRITTEN CONSENT OF THE GRANTEES. SUCH FACILITIES SHALL GENERALLY BE LOCATED UNDERGROUND AND, AFTER INSTALLATION OF ANY SUCH FACILITIES, THE GRADE OF THE SUBDIVIDED PROPERTY SHALL NOT BE ALTERED IN A MANNER SO AS TO INTERFERE WITH THE PROPER OPERATION AND MAINTENANCE THEREOF. THE LOCATION OF FACILITIES BY THE GRANTEES SHALL NOT CONFLICT OR INTERFERE WITH PUBLIC IMPROVEMENTS, AND ANY CONFLICTS IN USE SHALL BE SUBJECT TO RESOLUTION AND APPROVAL BY THE VILLAGE.

CABLE TELEVISION

A PERMANENT, NONEXCLUSIVE EASEMENT IS RESERVED FOR AND GRANTED TO THE VILLAGE AND/OR TO ANY CABLE TELEVISION COMPANY AUTHORIZED BY THE VILLAGE TO INSTALL CABLE TELEVISION FACILITIES WITHIN THE SUBDIVISION (REFERRED TO AS THE "COMPANY") AND TO THEIR SUCCESSORS AND ASSIGNS IN, UPON, ACROSS, UNDER AND THROUGH THE AREAS SHOWN AND/OR LABELED AS "DRAINAGE AND UTILITY EASEMENT" WITHIN DASHED LINES ON THE ATTACHED PLAT OF SUBDIVISION FOR THE PURPOSE OF INSTALLING, CONSTRUCTING, INSPECTING, OPERATING, REPLACING, RENEWING, ALTERING, ENLARGING, REMOVING, REPAIRING AND MAINTAINING CABLE TELEVISION LINES OR APPURTENANCES AND, WITHOUT LIMITATION, SUCH OTHER INSTALLATIONS AS MAY BE REQUIRED TO FURNISH CABLE TELEVISION SERVICE TO THE ATTACHED AREA AND SUCH APPURTENANCES AND ADDITIONS THERETO AS THE VILLAGE AND THE COMPANY MAY DEEM NECESSARY, TOGETHER WITH THE RIGHT OF ACCESS ACROSS THE EASEMENTS INCLUDED IN THE ATTACHED PLAT FOR THE NECESSARY MEN AND EQUIPMENT TO DO ANY AND ALL OF SUCH WORK. THE RIGHT IS ALSO GRANTED TO THE CITY AND THE COMPANY TO CUT DOWN, TRIM OR REMOVE ANY TREES, SHRUBS OR OTHER PLANTS THAT INTERFERE WITH THE OPERATION OF OR ACCESS TO SUCH LINES IN, ON, UPON, ACROSS, UNDER OR THROUGH SUCH EASEMENTS. NO PERMANENT BUILDINGS OR TREES SHALL BE PLACED ON SUCH EASEMENTS, BUT SOME MAY BE USED FOR GARDENS, SHRUBS, LANDSCAPING AND OTHER PURPOSES THAT DO NOT THEN OR LATER INTERFERE WITH SUCH USES AND RIGHTS. SUCH FACILITIES SHALL GENERALLY BE LOCATED UNDERGROUND, AND THE USE OF SUCH EASEMENT SHALL NOT CONFLICT OR INTERFERE WITH PUBLIC IMPROVEMENTS, AND ANY CONFLICTS IN USE SHALL BE SUBJECT TO RESOLUTION AND APPROVAL BY THE VILLAGE.

GAS EASEMENT

A AN EASEMENT IS HEREBY RESERVED FOR AND GRANTED TO NORTHERN ILLINOIS GAS COMPANY, AN ILLINOIS CORPORATION, DOING BUSINESS AS NICOR GAS COMPANY, ITS SUCCESSORS AND ASSIGNS (HEREINAFTER "NICOR") TO INSTALL, OPERATE, MAINTAIN, REPAIR, REPLACE AND REMOVE, FACILITIES USED IN CONNECTION WITH THE TRANSMISSION AND DISTRIBUTION OF NATURAL GAS IN, OVER, UNDER, ACROSS, ALONG, AND UPON THE SURFACE OF THE PROPERTY SHOWN ON THIS PLAT MARKED "EASEMENT", "UTILITY EASE,EMT", P.U.&D.E., "COMMON AREA OR AREAS", (OR SIMILAR DESIGNATIONS), STREETS AND ALLEYS, WHETHER PUBLIC OR PRIVATE, AND THE PROPERTY DESIGNATED IN THE DECLARATION OF CONDOMINIUM AND/OR ON THIS PLAT AS "COMMON ELEMENTS", TOGETHER WITH THE RIGHT TO INSTALL REQUIRED SERVICE CONNECTIONS OVER OR UNDER THE SURFACE OF EACH LOT AND COMMON AREA OR AREAS TO SERVE THE IMPROVEMENTS THEREON, OR ON ADJACENT LOTS AND COMMON AREA OR AREAS, AND TO SERVE OTHER PROPERTY, ADJACENT OR OTHERWISE, AND THE RIGHT TO REMOVE OBSTRUCTIONS, INCLUDING BUT NOT LIMITED TO, TREES, BUSHES, ROOTS, AND FENCES, AS MAY BE REASONABLY REQUIRED INCIDENT TO THE RIGHTS HEREIN GIVEN, AND THE RIGHT TO ENTER UPON THE PROPERTY FOR ALL SUCH PURPOSES. OBSTRUCTIONS SHALL NOT BE PLACED OVER NICOR FACILITIES OR IN, UPON OR OVER THE PROPERTY IDENTIFIED ON THIS PLAT FOR UTILITY PURPOSES WITHOUT THE PRIOR WRITTEN CONSENT OF NICOR. AFTER INSTALLATION OF ANY SUCH FACILITIES, THE GRADE OF THE PROPERTY SHALL NOT BE ALTERED IN A MANNER SO AS TO INTERFERE WITH THE PROPER OPERATION AND MAINTENANCE THEREOF.

THE TERM "COMMON ELEMENT" SHALL HAVE THAT MEANING SET FORTH FOR SUCH TERMS IN SECTION 605/2(e) OF THE "CONDOMINIUM POLICY ACT" (ILLINOIS COMPILED STATUTES, CH 765, SEC. 605/2(e)), AS AMENDED FROM TIME TO TIME.

THE TERM "COMMON AREA OR AREAS" IS DEFINED AS A LOT OR PARCEL OF REAL PROPERTY, INCLUDING REAL PROPERTY SURFACED WITH INTERIOR DRIVEWAYS AND WALKWAYS, THE BENEFICIAL USE AND ENJOYMENT OF WHICH IS RESERVED IN WHOLE AS AN APPURTENANCE TO THE SEPARATELY OWNED LOTS, PARCELS OR AREAS WITHIN THE PROPERTY, EVEN THOUGH SUCH AREAS MAY BE DESIGNATED ON THIS PLAT BY OTHER TERMS.

COMMONWEALTH EDISON COMPANY

BY:_____ DATE:_____

TITLE:_____

AMERITECH ILLINOIS:

BY:_____ DATE:_____

TITLE:_____

AT&T COMCAST:

BY:_____ DATE:_____

TITLE:_____

NORTHERN ILLINOIS GAS COMPANY (NICOR):

BY:_____ DATE:_____

TITLE:_____

Permission to record the plat is hereby granted to:

_____
(NAME)

_____
(ADDRESS)

_____

_____

Permanent Index Number:
02-21-211-003
02-21-211-002

EASEMENT PROVISIONS
An easement for serving the subdivision and other property with electric and communication service is hereby reserved for and granted to

Commonwealth Edison Company
and
SBC Telephone Company, Grantees,

their respective licensees, successors and assigns jointly and severally, to construct, operate, repair, maintain, modify, reconstruct, replace, supplement, relocate and remove, from time to time, poles, guys, anchors, wires, cables, conduits, manholes, transformers, pedestals, equipment cabinets or other facilities used in connection with overhead and underground transmission and distribution of electricity, communications, sounds and signals in, over, under, across, along and upon the surface of the property shown within the dashed or dotted lines (or similar designation) on the plat and marked 'Easement', 'Utility Easement', 'Public Utility Easement', 'P.U.E'(or similar designation), the property designated in the Declaration of Condominium and/or on this plat as 'Common Elements', and the property designated on the plat as 'common area or areas', and the property designated on the plat for streets and alleys, whether public or private, together with the rights to install required service connections over or under the surface of each lot and common area or areas to serve improvements thereon, or on adjacent lots, and common area or areas, the right to cut, trim or remove trees, bushes, roots and saplings and to clear obstructions from the surface and subsurface as may be reasonably required incident to the rights herein given, and the right to enter upon the subdivided property for all such purposes. Obstructions shall not be placed over Grantees facilities or in, upon or over the property within the dashed or dotted lines (or similar designation) marked 'Easement', 'Utility Easement', 'Public Utility Easement', 'P.U.E'(or similar designation) without the prior written consent of Grantees. After installation of any such facilities, the grade of the subdivided property shall not be altered in a manner so as to interfere with the proper operation and maintenance thereof.

The term 'Common Elements'shall have the meaning set forth for such term in the 'Condominium Property Act', Chapter 765 ILCS 605/2(c), as amended from time to time.

The term 'common area or areas'is defined as a lot, parcel or area of real property, the beneficial use and enjoyment of which is reserved in whole or as an apportionment to the separately owned lots, parcels or areas within the planned development, even though such be otherwise designated on the plat by terms such as 'outlots', 'common elements', 'open space', 'open area', 'common ground', 'parking'and 'common area'. The term 'common area or areas', and 'Common Elements'include real property surfaced with interior driveways and walkways, but excludes real property physically occupied by a building, Service Business District or structures such as a pool, retention pond or mechanical equipment.

Relocation of facilities will be done by Grantees at cost of the Grantor/Lot Owner, upon written request.

School Districts:

Elementary School District #_____

High School District #_____

Send the tax bill to :

_____
(NAME)

_____
(ADDRESS)

_____

_____

NOTARY CERTIFICATE

State of Illinois)
County of Cook) S.S.

I,_____ a notary public in and for said county in the state aforesaid, do hereby certify that _____ are personally known to me to be the same persons whose names are subscribed to the foregoing instrument as such owners, appeared before me this day in person and acknowledged that they signed and delivered said instrument of their own free and voluntary act and as the free and voluntary act for the uses and purposes therein set forth.

Given under my hand and notarial seal this _____ day of _____, A.D., _____.

_____
Notary Public

My commision expires on _____

OWNER'S CERTIFICATE

State of Illinois)
County of Cook) S.S.

This is to certify that _____are the owners of the property described hereon and that they have caused the said property to be surveyed and subdivided as shown hereon, for the uses and purposes therein set forth, and do hereby acknowledge and adopt the same under the title hereon indicated.

Dated this _____ day of _____, A.D., _____

_____
OWNER

ENGINEERING APPROVAL CERTIFICATE

State of Illinois)
County of Cook) SS

This plat has been checked for conformance to Village of Palatine standards and requirements and working drawings and specifications for streets, curb and gutter, watermains, sanitary sewer mains, storm water drainage and grading, sidewalks, street lights and street trees and soil erosion control have been prepared in conformance with the Village of Palatine standards and requirements and all engineering fees due the Village of Palatine have been paid.

_____ _____
Village Engineer Date

SURFACE WATER DRAINAGE STATEMENT

We hereby certify to the best of our knowledge and belief that adequete provisions have been made for the diversion and detention of surface waters into public areas or drains within the rights of the subdivision and that such surface waters will not be deposited on adjacent land owners property in such concentration as may cause damage by erosion or sedimentation to such property because of construction of the subdivision.

By _____ Dated _____
Owner

By _____ Dated 06-11-18
Illinois Professional Engineer #62-42874

TIMOTHY J. SPIES
62-42874
REGISTERED
PROFESSIONAL
ENGINEER
OF
ILLINOIS

PLAN COMMISION

State of Illinois)
County of Cook) S.S.

Approved by the plan commision of the Village of Palatine, Cook County, Illinois, at a meeting held this _____ day of _____, A.D., _____.

Signed: _____
Chairman

Attest: _____
Secretary

VILLAGE COLLECTOR

I do hereby certify that there no deferred special assessments or unpaid current assessments due against the land included in the above plat.

Dated this _____ day of _____, A.D., _____.

By: _____
Village Collector

VILLAGE COUNCIL

State of Illinois)
County of Cook) S.S.

Approved by the Village Council of the Village of Palatine, Cook County, Illinois,

this_____ day of _____, A.D., _____

Signed: _____
Mayor

Attest: _____
Clerk

SURVEYOR'S CERTIFICATE

State of Illinois)
County of Cook) S.S.

I, Matthew James Morrison, an Illinois Professional Land Surveyor, hereby certify that I have surveyed and subdivided and platted for the owners thereof the following described property to wit:

A SUBDIVISION OF LOTS 9 & 10 IN ARTHUR T. MCINTOSH & CO.'S PALATINE HILLS, A SUBDIVISION OF PART OF THE EAST HALF OF THE NORTHEAST ¼ OF SECTION 21, TOWNSHIP 42 NORTH, RANGE 10 EAST OF THE THIRD PRINCIPAL MERIDIAN, AS RECORDED ON FEBRUARY 15, 1928 AS DOCUMENT NUMBER 392915, ALL IN COOK COUNTY, ILLINOIS.

I also certify that the land included by said survey falls within the corporate limits of the Village of Palatine, Illinois.

I further declare, based upon a review of the flood insurance rate map (F.I.R.M.) Community Panel Number 17031C0177J with effective date August 19, 2009, it is our opinion that a portion of said property does not fall within a special flood hazard area as identified by said F.I.R.M. maps.

This plat correctly represents said survey and subdivision in every detail. All lot corners are marked with an iron pipe unless otherwise noted. Dimensions are in feet and decimal parts thereof, corrected to 62 degrees F. temperature.

Arlington Heights, Illinois, this 11th day of June, A.D., 2018

_____
Matthew James Morrison IPLS #35-3735 exp. 11-30-18

MATTHEW JAMES MORRISON
35-3735
PROFESSIONAL
LAND
SURVEYOR
STATE OF
ILLINOIS
MORRIS, IL

SPIES & ASSOCIATES, INC.
Civil Engineers – Land Surveyors
534 WEST CAMPUS DRIVE
ARLINGTON HEIGHTS, ILLINOIS 60004
PH 847.577.8808 FAX 847.577.0229

REVISIONS

DRAWN BY: TJS	JOB NO. 4851
DESIGNED BY: TJS	SCALE: NONE
CHECKED BY: MJM	DATE: 06-11-18

FINAL PLAT OF SUBDIVISION
HILLSIDE SUBDIVISION

SHEET NO. 2 OF 2 SHEETS

Attachment: Plat of Subdivision 833 W. Hillside Street (833 W. Hillside Street - 4-lot subdivision)

PUBLIC IMPROVEMENT PLANS
FOR
HILLSIDE SUBDIVISION
PALATINE, IL
BY
SKAR DEVELOPMENT, LLC

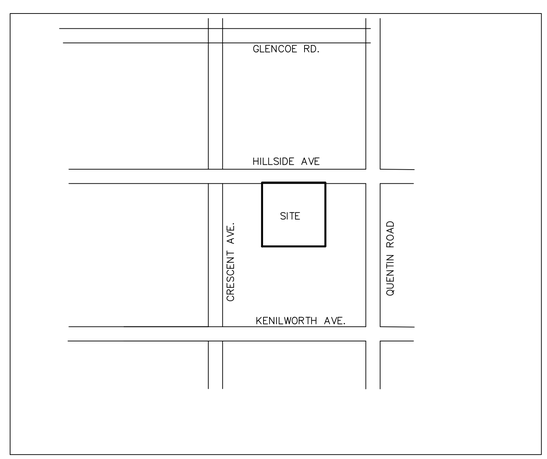

LOCATION MAP

THE PROPERTY SHOWN HEREON FALLS WITHIN ZONE X AS SHOWN ON FIRM 17031C181J DATED AUGUST 8, 2009 AND DOES NOT CONTAIN ANY FEDERALLY REGULATED FLOOD HAZARD AREAS.

LEGEND		
DESCRIPTION	EXISTING	PROPOSED
SANITARY SEWER		
STORM SEWER		
UNDERDRAIN		
WATERMAIN	W	W
GAS	G	G
IBT	I	I
CABLE	C	C
ELECTRIC	E	E
MANHOLE, INLET, CB FIRE HYDRANT, VALVE		
ELEVATIONS	(XXX.XX)	XXX.XX
TOP OF CURB EDGE OF PAVEMENT	XXX.XX XXX.XX	XXX.XX XXX.XX
GEOMETRIC COORDINATE	(XXXX)	(XXXX)
LIGHT POLES		
DRAINAGE ARROWS		
SEWER CLEANOUT		
WATER METER VAULT	M	M
UTILITY POLE		
SOIL BORINGS	N/A	B
TRAFFIC SIGN		
TRAFFIC ARROW		
PARKING STALL COUNT		
TREE		
RELOCATE TREE		
ITEM REMOVAL		N/A
PAVEMENT REMOVAL		N/A
P.C.C		
MARSH		N/A

ALL DIMENSIONS AND COORDINATES ARE REFERENCED TO THE EDGE OF PAVEMENT UNLESS INDICATED OTHERWISE

OPEN SYMBOLS AND DASHED LINES INDICATE EXISTING IMPROVEMENTS

INDEX OF SHEETS

1. TITLE SHEET
2. GENERAL NOTES
3. MWRD GENERAL NOTES
4. EXISTING CONDITIONS
5. GRADING PLAN
6. HILLSIDE AVE. PROFILE
7. EROSION CONTROL/TREE SURVEY
8. DETAILS

EXISTING UTILITIES

WHEN THE PLANS OR SPECIAL PROVISIONS INCLUDE INFORMATION PERTAINING TO THE LOCATION OF UNDERGROUND UTILITY FACILITIES, SUCH INFORMATION REPRESENTS ONLY THE OPINION OF THE ENGINEER AS TO THE LOCATION OF SUCH UTILITIES AND IS ONLY INCLUDED FOR THE CONVENIENCE OF THE BIDDER. THE ENGINEER AND THE OWNER ASSUME NO RESPONSIBILITY WHATSOEVER IN RESPECT TO THE SUFFICIENCY OR VERACITY OF THE INFORMATION SHOWN ON THE PLANS RELATIVE TO THE LOCATION OF UNDERGROUND UTILITY FACILITIES OR THE MANNER IN WHICH THEY ARE TO BE REMOVED OR ADJUSTED. IT SHALL BE THE CONTRACTORS RESPONSIBILITY TO DETERMINE THE ACTUAL LOCATION OF ALL SUCH FACILITIES. HE SHALL ALSO OBTAIN FROM THE RESPECTIVE UTILITY COMPANIES DETAILED INFORMATION RELATIVE TO THE LOCATION OF THEIR FACILITIES AND THE WORKING SCHEDULES OF THE UTILITY COMPANIES FOR REMOVING OR ADJUSTING THEM.

DRAINAGE STATEMENT

TO THE BEST OF OUR KNOWLEDGE AND BELIEF, THE DRAINAGE OF SURFACE WATERS WILL NOT BE CHANGED BY THE CONSTRUCTION OF THIS SUBDIVISION OR ANY PART THEREOF, OR, THAT IF DRAINAGE WILL BE CHANGED, REASONABLE PROVISION HAS BEEN MADE FOR THE COLLECTION AND DIVERSION OF SUCH SURFACE WATERS INTO THE PUBLIC AREAS, OR DRAINS APPROVED FOR THE USE BY THE MUNICIPAL ENGINEER, AND THAT SUCH SURFACE WATERS ARE PLANNED FOR IN ACCORDANCE WITH GENERALLY ACCEPTED ENGINEERING PRACTICES SO AS TO REDUCE THE LIKELIHOOD OF DAMAGE TO THE ADJOINING PROPERTY BECAUSE OF THE CONSTRUCTION OF THIS SUBDIVISION.

REGISTERED PROFESSIONAL ENGINEER 62-42874

BENCHMARK

RIM OF SANITARY MANHOLE ON THE WEST SIDE OF QUENTIN ROAD APPROXIMATELY 75' SOUTH OF HILLSIDE AVE.

NGVD29 ELEVATION 768.00

TO OBTAIN NAVD88 DATUM SUBTRACT 0.284'

PREPARED FOR:

SKAR DEVELOPMENT, LLC
21 N. BROCKWAY ST., STE 201
PALATINE, IL

TIMOTHY J. SPIES 62-42874 REGISTERED PROFESSIONAL ENGINEER OF ILLINOIS

CALL JULIE TOLL FREE 1(800)892-0123
OPERATES 24 HOURS A DAY 365 DAYS A YEAR

WARNING
CALL BEFORE YOU DIG
CALL 1(800)892-0123 48 HOURS BEFORE YOU DIG

SPIES & ASSOCIATES, INC.
Civil Engineers – Land Surveyors
534 WEST CAMPUS DRIVE
ARLINGTON HEIGHTS, ILLINOIS 60004
PH 847.577.8808 FAX 847.577.0229

REVISIONS

DRAWN BY: L.T.S.	JOB NO. 5144
DESIGNED BY: TJS	
CHECKED BY: T.J.S.	DATE: 06-06-18

PUBLIC IMPROVEMENT PLANS
COVER SHEET & LOCATION MAP

SHEET NO. 1 OF 8 SHEETS

Attachment: ENG Plans 833 W. Hillside Street (833 W. Hillside Street - 4-lot subdivision)

GENERAL NOTES AND CONDITIONS

1. ALL EARTHWORK, GRADING AND PAVING SHALL BE PERFORMED IN ACCORDANCE WITH STANDARD SPECIFICATIONS FOR ROAD AND BRIDGE CONSTRUCTION IN ILLINOIS, STATE OF ILLINOIS DEPARTMENT OF TRANSPORTATION, CURRENT EDITION, AND ALL REVISIONS AND SUPPLEMENTS THERETO, AND THE REQUIREMENTS AND SPECIFICATIONS OF THE VILLAGE OF PALATINE.

2. ALL SANITARY SEWER, WATER MAIN, AND STORM SEWER SHALL BE CONSTRUCTED IN ACCORDANCE WITH STANDARD SPECIFICATIONS FOR WATER AND SEWER MAIN CONSTRUCTION IN ILLINOIS, CURRENT EDITION, AND ALL REVISIONS AND SUPPLEMENTS THERETO, AND THE PUBLISHED STANDARD SPECIFICATIONS AND REQUIREMENTS OF THE VILLAGE OF PALATINE. THE CONTRACTOR IS RESPONSIBLE FOR FAMILIARIZING HIMSELF WITH THE VILLAGE OF PALATINE. REQUIREMENTS.

3. THE REQUIREMENTS AND SPECIFICATIONS OF THE VILLAGE OF PALATINE SUBDIVISION CONTROL ORDINANCE SHALL GOVERN OVER ALL.

4. THE VILLAGE OF PALATINE ENGINEERING DEPARTMENT MUST BE NOTIFIED AT LEAST TWO (2) WORKING DAYS PRIOR TO THE REQUEST FOR INSPECTION, COMMENCEMENT OR RESUMPTION OF ANY WORK.

5. THE CONTRACTOR SHALL KEEP CAREFUL MEASUREMENTS AND RECORDS OF ALL CONSTRUCTION AND SHALL FURNISH THE ENGINEER AND THE VILLAGE WITH RECORD DRAWINGS UPON COMPLETION OF HIS WORK. SET OF MYLAR-REPRODUCIBLE RECORD DRAWINGS AND COPIES MUST BE FURNISHED TO THE VILLAGE BY THE DEVELOPER.

THE CONTRACTOR SHALL ACCURATELY MARK THE LOCATION OF EACH SANITARY SERVICE, STORM SERVICE AND WATER SERVICE CONNECTION BY PLACING A 4" X 4" POST EIGHT FEET LONG AT THE END OF EACH SERVICE CONNECTION. EACH POST SHALL BE SET SO IT IS PLUMB AND THE TOP END IS THIRTY SIX (36) INCES ABOVE GRADE. THE TOP EIGHTEEN (18) INCES OF EACH POST SHALL BE NEATLY PAINTED TO INDICATE WHICH SERVICE IS BEING MARKED. RED INDICATES SANITARY, GREEN INDICATES STORM AND BLUE INDICATES WATER. POSTS WHICH ARE DESTROYED, BROKEN OR PULLED OUT SHALL BE REPLACED BY THE CONTRACTOR.

THE CONTRACTOR SHALL PROVIDE THE ENGINEER WITH A TABULAR LISTING OF EACH AND EVERY SERVICE CONNECTION AND THIER LOCATIONS RELATIVE TO PERMANENT FIXED OBJECTS SUCH AS MANHOLES, PROPERTY CORNERS, ETC. EACH "B"-BOX SHALL BE ACCURATELY LOCATED BY A SERIES OF THREE PRECISE INTERSECTING LOCATION MEASUREMENTS. THE DEPTH AS MEASURED FROM FINISHED GRADE SHALL ALSO BE RECORDED. FINALLY, THE LOCATION OF ALL WYES AND SERVICE LINE TAPE SHALL BE ACCURATLY RECORDED BY MEASURING THE DISTANCE TO THE NEAREST DOWNSTREAM STRUCTURE.

6. THE CONTRACTOR SHALL VERIFY THE LOCATION OF ALL UTILITIES IN THE FIELD PRIOR TO CONSTRUCTION. THIS INCLUDES SANITARY SEWER, WATER MAIN, STORM SEWER, ILLINOIS BELL TELEPHONE, COMMONWEALTH EDISON, NORTHERN ILLINOIS GAS, AND CABLE TELEVISION IF ANY. THE JULIE NUMBER IS 1-800-892-0123.

7. ALL WORK PERFORMED BY THE CONTRACTOR SHALL BE GUARANTEED BY THE CONTRACTOR FOR A PERIOD OF TWELVE (12) MONTHS FROM THE DATE OF FINAL ACCEPTANCE. THIS GUARANTEE SHALL INCLUDE ALL DEFECTS IN MATERIALS AND WORKMANSHIP. THE DEVELOPER WILL BE RESPONSIBLE FOR MAINTENANCE FOR TWO (2) YEARS AFTER 80% OCCUPANCY IS REACHED.

8. ANY DIRT OR MATERIALS SHALL BE DISPOSED OF BY THE CONTRACTOR OFFSITE AT THE CONTRACTOR'S EXPENSE. THE DISPOSAL LOCATION MUST BE APPROVED BY THE VILLAGE IF WITHIN VILLAGE LIMITS.

9. ALL STRUCTURES, INLETS, PIPES, SWALES AND ROADS MUST BE KEPT CLEAN AND FREE OF DIRT AND DEBRIS AT ALL TIMES.

10. THE CONTRACTOR IS RESPONSIBLE FOR MAINTAINING ADEQUATE SIGNS, BARRICADES, FENCING, TRAFFIC CONTROL DEVICES AND MEASURES, AND ALL OTHER MEASURES THAT ARE NECESSARY TO PROTECT THE SAFETY OF THE SITE AT ALL TIMES. ALL SIGNS SHALL BE AS PER THE MANUAL OF TRAFFIC CONTROL DEVICES, CURRENT EDITION.

11. THE CONTRACTOR, BY AGREEING TO PERFORM THE WORK, AGREES TO INDEMNIFY AND HOLD HARMLESS THE OWNER, THE ENGINEER, THE VILLAGE AND ALL AGENTS AND ASSIGNS OF THOSE PARTIES, FROM ALL SUITS AND CLAIMS ARISING OUT OF THE PERFORMANCE OF SAID WORK, AND FURTHER AGREES TO DEFEND OR OTHERWISE PAY ALL LEGAL FEES ARISING OUT OF THE DEFENSE OF SAID PARTIES.

12. ALL ELEVATIONS ARE NGVD29 DATUM.

SOIL EROSION AND SEDIMENT CONTROL

1. REASONABLE CARE MUST BE TAKEN TO MINIMIZE SOIL EROSION. REFER TO THE STATE OF ILLINOIS "PROCEDURES AND STANDARDS FOR URBAN SOIL EROSION AND SEDIMENTATION CONTROL". THE U.S. SOIL CONSERVATION SERVICE IS ALSO AVAILABLE TO PROVIDE GUIDANCE.

2. ANY DISTURBED AREAS SHALL BE KEPT TO A PRACTICAL MINIMUM AND SHALL BE MULCHED, SEEDED, SODDED, OR PAVED WITHIN 7 CALENDAR DAYS FOLLOWING THE END OF ACTIVE DISTURBANCE.

3. ALL INLETS, STRUCTURES, PIPES, SWALES, AND ROADS SHALL BE KEPT CLEAN AND FREE OF DIRT AND SILT. STREETS ADJACENT TO THE SITE SHALL BE KEPT FREE OF DIRT, MUD AND OR DEBRIS BY SWEEPING.

4. STOCKPILES SHALL HAVE A BERM OR TRENCH AROUND THE CIRCUMFERENCE TO CONTROL SILT. STOCK PILES IN PLACE LONGER THAN 15 DAYS SHALL BE SEEDED. STOCKPILES SHALL ALSO HAVE A SILT FENCE PLACED AROUND.

5. STRAW BALES FIRMLY ANCHORED SHALL BE PLACED AROUND ALL INLETS, CATCHBASINS, SWALES, AND ADJACENT LANDS THAT RECEIVE SILTY RUNOFF DURING THE COURSE OF CONSTRUCTION. ALL STORM STRUCTURES SHALL HAVE FILTER FABRIC PLACED UNDER THE COVER AS ADDED PROTECTION. ADDITIONAL MEASURES AS DIRECTED BY THE VILLAGE ENGINEER.

6. ALL WETLANDS AND WATERCOURSE SHALL BE TOTALLY PROTECTED WITH SILT FENCE.

7. ADDITIONAL SOIL EROSION CONTROL MEASURES SHALL BE UNDERTAKEN DURING THE COURSE OF CONSTRUCTION, AS NEEDED.

8. MAINTAIN SOIL EROSION CONTROL DEVICES THROUGH THE DURATION OF THIS PROJECT.

9. REPLACE SOIL EROSION CONTROL DEVICES WITH SOD AND TOPSOIL AT THE COMPLETION OF THE PROJECT.

10. FOLLOWING PRELIMINARY EARTHWORK AND STORM SEWER CONSTRUCTION, SILT FENCE WILL BE PLACED AROUND THE RETENTION POND AND EITHER HAY BALES OR SILT FENCE WILL BE BE STAKED AROUND INLET STRUCTURES AS DIRECTED BY THE CITY ENGINEER.

11. PERENNIAL RYE GRASS SHALL BE SEEDED AND MAINTAINED IN AREAS WITH HIGH EROSION POTENTIAL.

STORM SEWER

1. ALL STORM SEWER SHALL BE CONSTRUCTED OF REINFORCED CONCRETE PIPE CLASS IV OR THICKER CONFORMING TO ASTM C-76, WITH PREFORMED JOINTS (ASTM C-433).

2. ALL INLETS, CATCHBASINS, AND MANHOLES SHALL BE PRECAST CONCRETE.

3. ALL STORM SEWERS UNDER AND WITHIN TWO FEET OF ANY EXISTING OR PROPOSED PAVEMENT OR SIDEWALK SHALL BE BACKFILLED WITH GRANULAR BACKFILL MATERIAL IDOT GRADATION CA-7 OR APPROVED EQUAL. (100% CRUSHED)

4. ANY FIELD TILES ENCOUNTERED SHALL BE RECONNECTED OR CONNECTED TO THE STORM SEWER SYSTEM. THE SIZE, LOCATION, AND DEPTH OF THE TILES SHALL BE RECORDED BY THE CONTRACTOR AND IMMEDIATELY REPORTED TO THE FIELD TILES TO BE SHOWN ON RECORD DRAWINGS.

5. FOOTING DRAINS SHALL DISCHARGE TO GRADE VIA SUMP PUMP DISCHARGE. VILLAGE OF PALATINE. LOCATION, SIZE & INVERT OF

6. ALL STORM SEWERS DISCHARGING ON THE GROUND SHALL BE INSTALLED WITH FLARED END SECTIONS AND TRASH/SAFETY GRATES.

WATER MAIN

1. ALL WATER MAIN SHALL BE CONSTRUCTED OF DUCTILE IRON PIPE CLASS 52 CONFORMING TO ANSI A-21.51 AND WITH JOINTS CONFORMING TO ANSI A-21.11. THE WATER MAIN SHALL BE CEMENT-LINED IN ACCORDANCE WITH ANSI A-21.4, BITUMINOUS COATED.

2. THE MINIMUM COVER FOR ALL WATER MAIN AND WATER SERVICE PIPE IS FIVE AND A HALF FEET (5'-6") FROM FINISHED GRADE TO TOP OF PIPE.

3. ALL WATER MAINS UNDER AND WITHIN TWO FEET OF ANY EXISTING OR PROPOSED PAVEMENT OR SIDEWALK SHALL BE BACKFILLED WITH GRANULAR BACKFILL MATERIAL IDOT GRADATION CA-7 OR APPROVED EQUAL. (100% CRUSHED)

4. ALL 6", 8",10" & 12" VALVES SHALL BE RESILIENT WEDGE VALVES AND BE FURNISHED MECHANICAL JOINTED, WITH CAST IRON BODY, BRONZE MOUNTED, BRONZE STEMMED, DOUBLE DISC PATTERN, WITH NON-RISING STEM AND BE DESIGNED FOR 300 POUNDS WORKING PRESSURE. ALL VALVES SHALL OPEN LEFT.

5. ALL WATER MAIN SHALL BE PRESSURE TESTED TO 150 POUNDS STATIC PRESSURE, IN ACCORDANCE WITH THE REQUIREMENTS OF THE VILLAGE OF PALATINE.

6. MAXIMUM ALLOWABLE LEAKAGE SHALL BE 4 GALLONS PER INCH OF PIPE DIA. /1000 FT. OF PIPE/24 HRS. PER CITY REQUIREMENTS. TESTING SHALL BE IN ACCORDANCE WITH "PROCEDURES FOR PRESSURE TESTING AND DISINFECTION OF WATER MAINS AND WATER SERVICES WITHIN THE VILLAGE OF PALATINE.

7. AFTER THE PRESSURE TEST HAS BEEN ACCEPTED, THE CONTRACTOR SHALL CHLORINATE THE WATER MAINS WITH GAS IN ACCORDANCE WITH THE REQUIREMENTS OF AWWA, THE ILLINOIS EPA, AND THE VILLAGE OF PALATINE. CHLORINATION SHALL BE PERFORMED UNDER THE DIRECTION OF THE VILLAGE ENGINEER AND WATER DEPARTMENT.

8. A MINIMUM HORIZONTAL DISTANCE OF 10 FEET SHALL BE MAINTAINED BETWEEN THE WATER MAIN AND ANY SEWERS WHEN THEY ARE PARALLEL. WHENEVER A SEWER CROSSES A WATER MAIN, A MINIMUM VERTICAL DISTANCE OF 18 INCHES MUST BE MAINTAINED BETWEEN THE OUTSIDE OF THE PIPES, AND THE SEWER JOINTS ARRANGED SO THEY ARE EQUIDISTANT AS FAR AS POSSIBLE FROM THE WATER MAIN JOINTS. WHEN IT IS NECESSARY FOR A SEWER TO CROSS OVER THE TOP OF A WATER MAIN, THE FOLLOWING METHOD MUST ALSO BE CONSTRUCTED: A) THE SEWER SHALL BE DESIGNED AND CONSTRUCTED EQUAL TO WATER MAIN PIPE FOR A DISTANCE 10 FEET EITHER SIDE OF THE CROSSING AND SHALL BE PRESSURE-TESTED TO INSURE WATER TIGHTNESS PRIOR TO BACKFILLING.

9. THE WATER SERVICE PIPE SHALL BE 1 1/4" DIA. TYPE K COPPER. CORPORATION COCK SHALL BE MUELLER #H15000. THE CURB STOP SHALL BE MUELLER #H15154 AND THE SERVICE BOX SHALL BE MUELLER #H10302. ALL ITEMS SHALL CONFORM TO THE REQUIREMENTS OF THE VILLAGE OF PALATINE.

10. NO OBJECT MAY BE CONSTRUCTED, MAINTAINED, OR INSTALLED WITHIN 48 INCHES OF A FIRE HYDRANT. NO TREES, BUSHES, WALLS, OR OTHER OBSTACLES WHICH MAY HIDE OR IMPEDE THE USE OF A FIRE HYDRANT WILL BE PERMITTED.

11. HYDRANTS SHALL BE PAINTED WITH APPROVED PAINT.

12. ALL FIRE HYDRANTS SHALL BE MUELLER "CETURION" BREAK AWAY STYLE TRAFFIC DESIGN. SAID HYDRANTS SHALL HAVE A 5-1/4 INCH VALVE OPENING, 8-INCH DIAMETER STANDPIPE, TWO 2-1/2 INCH HOSE NOZZLES AND ONE 4-1/2 INCH PUMPER NOZZLE, ALL WITH NATIONAL/ STANDARD THREADS. HYDRANTS SHALL HAVE SIX FOOT DEPTH OF BURY AND BE FURNISHED MECHANICAL JOINTED. THE SIZE OF THE INLET CONNECTION SHALL BE 6-INCH. ON THE SIX INCH LINE CONNECTING THE HYDRANT TO THE MAIN SHALL BE PLACED A SIX-INCH GATE VALVE AND ROADWAY BOX, MUELLER #H-10360 OR EQUAL. THE OPERATING NUT SHALL BE THE NATIONAL STANDARD OF 1-1/2 INCH PENTAGON MEASURED FROM POINT TO OPPOSITE FLAT. HYDRANTS SHALL OPEN COUNTER CLOCKWISE. ALL PUBLIC HYDRANTS SHALL BE FURNISHED RED IN COLOR, AND SHALL BE PLACED SO THAT THE CENTER OF THE PUMPER NOZZLE IS 24 TO 36 INCHES ABOVE THE GROUND LINE. A HOLE OF 1/2 CUBIC YARD VOLUME SHALL BE DUG AT EACH HYDRANT AND FILLED WITH WASHED GRAVEL TO ACT AS A DRAIN. HYDRANTS TO CONFORM TO AWWA C-502.

13. FIRE HYDRANTS SHALL BE PLACED 3 TO 7 FEET FROM THE BACK OF CURB TO THE FACE OF HYDRANT, WITH 3 FEET BEING THE PREFERRED DISTANCE., AS SHOWN ON THE DETAIL. HYDRANTS SHALL NOT HAVE LESS THAN 36" CLEARANCE BETWEEN THE BACK OF CURB AND THE NEAREST PART OF THE HYDRANT AND MIN. 2' FROM SIDEWALK.

ALL SANITARY SEWER SERVICES (820 LF) SHALL BE 6" PVC WITH A MINIMUM SLOPE OF 1% AND WHEN A WATER SERVICE CROSSES ABOVE A WATERMAIN, THE SANITARY SERVICE SEWER SHALL BE WATERMAIN QUALITY PIPE PVC (ASTM D-2241) OR DIP.

SANITARY SEWER NOTES

1. ALL SANITARY PIPE AND SERVICES SHALL BE P.V.C. (S.D.R. 26) PIPE CONFORMING TO ASTM D-3034 WITH GASKET JOINTS CONFORMING TO ASTM D-3212. ANY OTHER PIPE MATERIALS MUST CONFORM TO THE VILLAGE.

2. ALL FLOOR DRAINS SHALL DISCHARGE TO THE SANITARY SEWER.

3. ALL DOWNSPOUTS AND OUTSIDE DRAINS SHALL DISCHARGE TO GRADE AND NOT TO THE SANITARY SEWER.

4. ALL SANITARY SEWER CONSTRUCTION REQUIRES STONE BEDDING MATERIAL 1/4" TO 3/4" IN SIZE, WITH A THICKNESS BELOW THE BOTTOM OF THE PIPE OF NOT LESS THAN 4" AND EXTENDING TO A MINIMUM OF 12" ABOVE THE TOP BACKFILL SHALL BE CA-11/13, 100% CRUSHED PER ASTM D-2321, EQUIVELANT TO CLASS I OR APPROVED EQUAL.

5. "BAND-SEAL" OR SIMILAR FLEXIBLE-TYPE COUPLINGS SHALL BE USED IN THE CONNECTION OF SEWER PIPE OF DISSIMILAR MATERIALS. ALL HARDWARE ASSOCIATED WITH THE COUPLINGS SHALL BE OF STAINLESS STEEL.

6. WHEN CONNECTING TO AN EXISTING SEWER MAIN BY MEANS OTHER THAN AN EXISTING WYE, TEE, OR AN EXISTING MANHOLE, ONE OF THE FOLLOWING METHODS SHALL BE USED: A.) REMOVE AN ENTIRE SECTION OF PIPE (BREAKING ONLY THE TOP OF ONE BELL) AND REPLACE WITH A WYE OR TEE BRANCH SECTION. B.) WITH PIPE CUTTER, NEATLY AND ACCURATELY CUT OUT DESIRED LENGTH OF PIPE FOR INSERTION OF PROPER FITTING, USING "BAND-SEAL" OR SIMILAR COUPLINGS TO HOLD IT FIRMLY IN PLACE. C.) INSTALL A NEW MANHOLE.

7. ALL SEPTIC TANKS (IF ANY) BEING ABANDONED SHALL BE FILLED OR REMOVED. APPROVAL MUST BE OBTAINED FROM THE COUNTY HEALTH DEPARTMENT. ALL SEWER CONNECTIONS SHALL BE MADE UPSTREAM FROM THE TANK. CONTRACTORS SHALL OBTAIN ANY NECESSARY PERMITS FOR REMOVAL.

8. ALL SANITARY AND STORM MANHOLES SHALL BE PRECAST CONCRETE, TYPE A WITH PRECAST CONCRETE ADJUSTING RINGS, AND SHALL HAVE A MINIMUM INSIDE DIAMETER OF 48 INCHES. THE MANHOLE FRAME SHALL BE SECURED TO THE MANHOLE WITH MASTIC OR MORTAR.

9. A MINIMUM HORIZONTAL DISTANCE OF 10 FEET SHALL BE MAINTAINED BETWEEN THE WATER MAIN AND ANY SEWERS WHEN THEY ARE PARALLEL. WHENEVER A SEWER CROSSES A WATER MAIN, A MINIMUM VERTICAL DISTANCE OF 18 INCHES MUST BE MAINTAINED BETWEEN THE OUTSIDE OF THE PIPES, AND THE SEWER JOINTS ARRANGED SO THEY ARE EQUIDISTANT AND AS FAR AS POSSIBLE FROM THE WATER MAIN JOINTS. WHEN IT IS NECESSARY FOR A SEWER TO CROSS OVER THE TOP OF A WATER MAIN, THE FOLLOWING METHOD MUST ALSO BE CONSTRUCTED: A.) THE SEWER SHALL BE DESIGNED AND CONSTRUCTED EQUAL TO THE WATER MAIN PIPE FOR A DISTANCE TEN (10) FEET EITHER SIDE OF THE CROSSING AND SHALL BE PRESSURE-TESTED TO INSURE WATER TIGHTNESS PRIOR TO BACKFILLING.

10. ALL SANITARY SEWERS SHALL BE TESTED IN KEEPING WITH VILLAGE REQUIREMENTS. INFILTRATION SHALL NOT EXCEED 100 GALLONS/INCH DIAMETER/MILE/DAY. ALL SANITARY & STORM SEWERS MUST BE TELEVISED AND THE TAPES MUST BE SUBMITTED TO THE VILLAGE ENGINEER.WRITTEN (TYPED) LOGS SHALL BE SUBMITTED TO THE VILLAGE DETAILING SERVICE WYE LOCATIONS AND DEFECTS, ETC. LOCATED. AIR TESTING AND DEFLECTION TESTING OF ALL SANITARY SEWERS IS REQUIRED. CONSTRUCTION SHALL CONFORM TO "ILLINOIS RECOMMENDED STANDARDS FOR SEWAGE WORKS", LATEST EDITION, PUBLISHED BY THE ILLINOIS E.P.A. EXCEPT FOR CONFLICTS WITH THE VILLAGE OF PALATINE PROCEDURES, WHERE THE VILLAGE ORDINANCE SHALL TAKE PRECEDENCE.

11. ALL MANHOLES, CATCHBASINS & VALVE VAULTS IN STREET SHALL BE SET IN A FULL MORTOR BED.

STREET LIGHTING

1. STREET LIGHT POLES AND FIXTURES SHALL BE CONSTRUCTED AT LOCATIONS SHOWN ON THE ENGINEERING DRAWINGS. THE TYPE OF POLE AND FIXTURES SHALL BE ACCEPTABLE TO THE VILLAGE. CATALOG CUTS MUST BE SUBMITTED FOR APPROVAL PRIOR TO ORDERING ANY MATERIALS.

2. NO UNDERGROUND SPLICES WILL BE ALLOWED. ALL SPLICES SHALL BE MADE IN THE BASES OF THE LIGHT POLES OR IN HANDHOLES USING 3M SPLICE KIT.

3. CONDUIT SHALL BE BURIED A MINIMUM OF 30 INCHES BELOW THE PROPOSED GRADE.

4. CABLE LENGTHS SHALL INCLUDE SLACK AS REQUIRED.

5. THE CONTRACTOR SHALL COORDINATE THE CONNECTION AND SERVICE POINTS WITH COMMONWEALTH EDISON COMPANY.

6. NO. 8 BARE COPPER GROUND WIRE SHALL BE INSTALLED IN TRENCH, 6" ABOVE LIGHTING CABLE.

7. ALL ELECTRIC CABLE SHALL BE #8AWG IN 1-1/4" UNIT DUCT. ALL ELECTRIC CABLE SHALL BE INSTALLED IN 2" DIA. GALVANIZED STEEL CONDUIT UNDER ALL PAVEMENT CROSSINGS.

8. ALL GRC IS TO BE INSTALLED WITH PROTECTIVE BUSHING ON ENDS.

9. 2" GRC TO EXTEND A MINIMUM OF 6" ON EITHER SIDE OF DRIVEWAYS, SIDEWALKS & STREET CROSSINGS.

10. IF DRIVEWAY LOCATIONS ARE UNKNOWN AT THE TIME OF CONSTRUCTION, THEN CONDUIT SHALL BE EXTENDED TO INCLUDE THE ENTIRE LOT LENGTH.

EARTHWORK, GRADING, AND PAVING

1. ALL PROPOSED PAVEMENT AREAS SHALL BE STRIPPED OF ALL TOPSOIL AND UNSUITABLE MATERIAL AND EXCAVATED OR FILLED TO WITHIN 0.10 FEET OF DESIGN SUBGRADE.

2. THE SUBGRADE SHALL BE FREE OF ALL UNSUITABLE MATERIAL AND SHALL BE COMPACTED TO A MINIMUM 95 PER CENT OF MODIFIED PROCTOR DENSITY.

3. THE SUBGRADE SHALL BE INSPECTED BY A QUALIFIED SOILS TESTING LABORATORY REPRESENTATIVE.

4. STOCKPILING OF SOIL SHALL BE AT LOCATIONS DESIGNATED BY OWNER. AND AS SHOWN ON THE PLANS.

5. THE EARTHWORK CONTRACTOR SHALL BE RESPONSIBLE FOR REMOVAL OF SPOIL MATERIAL FROM THE UNDERGROUND CONTRACTORS, PREPARING THE ROADWAY SUBGRADE, PLACING TOPSOIL TO A MINIMUM DEPTH OF 6 INCHES TO FINISHED GRADE, GRADING OR DRAINAGE SWALES, AND ALL OTHER TASKS AS DIRECTED BY THE OWNER OR ENGINEER.

6. THE QUANTITIES CONTAINED IN THESE DOCUMENTS ARE APPROXIMATE AND ESTIMATED, AND ARE PRESENTED AS A GUIDE TO THE CONTRACTOR IN DETERMINING ALL QUANTITIES AND TO BECOME FAMILIAR WITH THE SITE AND SOIL CONDITIONS.

7. THE EARTHWORK CONTRACTOR IS RESPONSIBLE FOR MAINTAINING POSITIVE DRAINAGE AT THE CONCLUSION OF EACH WORKING DAY.

8. THE PAVING CONTRACTOR IS RESPONSIBLE FOR THE FINAL SUBGRADE PREPARATION, THE PAVEMENT BASE, BINDER, AND SURFACE, AND ALL FINAL CLEAN-UP AND RELATED WORK ASSOCIATED WITH THE PAVING OPERATION.

9. THE PROPOSED CURB AND GUTTER AND PAVEMENT SHALL BE OF THE TYPE AND THICKNESS AS SPECIFIED IN THE ENGINEERING DRAWINGS, AND CONSTRUCTED IN STRICT CONFORMANCE WITH THE PREVIOUS REFERENCED STANDARD SPECIFICATIONS, AND THE REQUIREMENTS OF THE VILLAGE OF PALATINE

10. THE COMBINATION CURB AND GUTTER SHALL BE CONSTRUCTED OF I.D.O.T. CLASS SI CONCRETE AND SHALL BE IN STRICT CONFORMANCE WITH THE PROVISIONS OF SECTION 720.04 OF STANDARD SPECIFICATIONS..., CURRENT EDITION. ALL CURB AND GUTTER SHALL BE BROOM FINISHED.

11. CURING AND PROTECTION OF ALL CONCRETE SHALL BE IN STRICT CONFORMANCE WITH THE PROVISIONS OF SECTION 720.13 OF STANDARD SPECIFICATIONS, CURRENT EDITION.

12. THE CURB AND GUTTER SHALL HAVE TWO (2) 3/4"-THICK PREMOULDED FIBER EXPANSION JOINTS WITH 3/4"-DIAMETER BY 18-INCH LONG PLAIN ROUND STEEL DOWEL BARS AT 100-FOOT INTERVALS, AT ALL PC'S AND PT'S, AND AT ALL CURB RETURNS. CONTRACTION JOINTS SHALL BE CONSTRUCTED AT 10-FOOT INTERVALS. THE COST OF THESE JOINTS SHALL BE INCIDENTAL TO THE CURB AND GUTTER.

13. DEPRESSED CURB SHALL BE PROVIDED FOR HANDICAPPED RAMPS AT ALL SIDEWALKS ABUTTING THE CURB AND GUTTER.

SCHEDULE OF CASTINGS	GRASS AREA	PAVEMENT AREA	IMPRINT
VALVE VAULTS	R-1712-C	R-1712-C	"WATER"
CATCHBASIN TYPE A	R-4340-B	R-3501-P R-3010 IN B-6.18 CURB R-3170 IN B-6.12 CURB R-3501-P IN M-3.12 CURB	NONE
STORM MANHOLE TYPE A	R-1712-C	R-1712-C	"STORM"
SANITARY MANHOLE TYPE A	R-1712-C	R-1712-C	"SANITARY"
SANITARY MANHOLE STEPS	PS-I PLASTIC COATED BY MA INDUSTRIES OR APPROVED EQUAL	PS-I PLASTIC COATED BY MA INDUSTRIES OR APPROVED EQUAL	NONE

ALL CASTINGS SHALL BE NEENAH OR APPROVED EQUAL
ALL GRATES SHALL BE BICYCLE-SAFE, AS APPLICABLE
ALL SANITARY MANHOLE LIDS SHALL BE SELF-SEALING, GASKETED WITH CONCEALED PICKHOLE.

TABLE OF PIPE & JOINT SPECIFICATIONS

USE	MATERIAL	GRADE SPEC.	JOINT SPEC.
STORM	R.C.P.	IV C-76	O-RING JOINT C-443
SANITARY SERVICE	P.V.C.	SDR-26 ASTM D-3034	JOINT ASTM D-3212 GASKET F-477
SANITARY SEWER	P.V.C.	SDR-26 ASTM D-3034	JOINT ASTM D-3212 GASKET F-477
WATER MAIN	D.I.P.	CL.52 ANSI/AWWA C151/A21.4	ANSI/AWWA F477 ASTM D-3139

NOTE:
AS A MINIMUM REQUIREMENT ALL SEWER PIPES BE LAID IN ACCORDANCE WITH THE WITH THE APPLICABLE ASTM STANDARD AND THE LATEST VERSION OF THE STANDARD SPECIFICATIONS FOR WATER AND SEWER MAIN CONSTRUCTION IN ILLINOIS

NOTES ON SEQUENCE OF EROSION CONTROL MEASURES

PRIOR TO ANY EXCAVATION WORK THE PERIMETER OF THE PROJECT SHALL BE SILT FENCED AS WELL AS ANY WETLANDS THAT ARE TO BE PROTECTED.

1. STRIPPING & STOCKPILING OF TOPSOIL AND ROUGH GRADING.
2. PLACEMENT OF ALL SILT FENCE AS SOON AS BASINS ARE COMPLETED.
3. FINAL GRADING AND CONSTRUCTION.
4. ESTABLISH PERMANENT VEGETATION OR EROSION CONTROL MATTING DURRING THE FIRST POSSIBLE GROWING SEASON.

NOTES ON SILT FENCE MAINTENANCE

1. SOIL DEPOSITS LEFT ON EROSION CONTROL DEVICES WILL BE REMOVED AFTER EACH RAINFALL.
2. IF PART OF THE SILT FENCE DETERIORATES DURING THE CONSTRUCTION, IT WILL BE REPLACED. SILT FENCES SHALL BE INSPECTED AND REPAIRED DAILY.
3. AFTER THE COURSE OF CONSTRUCTION AND AFTER GRASS HAS TAKEN, EROSION CONTROL DEVICES WILL BE REMOVED, SWALES WILL BE GRADED TO CONFORM TO THE PROPOSED GRADING PLAN, AND GRASS WILL BE PLACED IN THESE AREAS.

NOTE:
ALL STOCK PILES SHALL BE SILT FENCED & TEMPORARILY SEEDED.
ALL TEMPORARY SEEDING SHALL BE DONE WITHIN 7 DAYS OF ROUGH GRADING. ALL PERMANENT SEEDING SHALL BE DONE WITHIN 7 DAYS OF FINAL GRADING.
ALL STORM RUNOFF TO BE COLLECTED & CONVEYED TO THE DETENTION BASIN VIA STORM SEWERS.
ALL DRAINAGE CHANNELS SHALL BE SEEDED & NETTED OR SODDED AND SHALL BE INSPECTED AFTER EACH 1/2" RAINFALL. ANY MAINTENANCE REQUIRED SHALL BE DONE IMMEDIATLY.
ALL SWALES SHALL BE PROTECTED BY ROCK CHECK DAMS PER DETAIL @ 50' INTERVALS, ACCORDING TO CONSERVATION PRACTICES #910.

NOTE:
FOR TEMPORARY SEEDING USE PERENNIAL RYEGRASSAT THE RATE OF 25 LBS./ACRE. PLANT EARLY SPRING UNTIL SEPT. 30. FERTILIZE WITH LIME FERTILIZER MIXTURE IN TOP 2-4 INCHES OF TOPSOIL.
USE 10-10-10 FERTILZER AT RATE OF 500 LBS./ACRE.
FOR PERMANENT SEEDING USE KENTUCKY BLUE GRASSAT RATE OF 86 LBS./ACRE. PLANT EARLY SPRING TO MAY 30 OR AUGUST 1 TO SEPT. 1
FERTILIZE 1 YEAR AFTER PLANTING WITH 10-20-10 FERTILIZER AT RATE OF 500 LBS./ACRE.

SPIES & ASSOCIATES, INC.
Civil Engineers – Land Surveyors
534 WEST CAMPUS DRIVE
ARLINGTON HEIGHTS, ILLINOIS 60004
PH 847.577.8808 FAX 847.577.0229

REVISIONS

DRAWN BY: TJS
DESIGNED BY: TJS
CHECKED BY: TJS
JOB NO. 5144
SCALE:
DATE: 06-06-18

GENERAL NOTES
HILLSIDE SUBDIVISION

SHEET NO. 2 OF 8 SHEETS

Attachment: ENG Plans 833 W. Hillside Street (833 W. Hillside Street - 4-lot subdivision)

A. REFERENCED SPECIFICATIONS

1. ALL CONSTRUCTION SHALL BE IN ACCORDANCE WITH THE APPLICABLE SECTIONS OF THE FOLLOWING, EXCEPT AS MODIFIED HEREIN OR ON THE PLANS:
   * STANDARD SPECIFICATIONS FOR ROAD AND BRIDGE CONSTRUCTION (LATEST EDITION), BY THE ILLINOIS DEPARTMENT OF TRANSPORTATION (IDOT SS) FOR ALL IMPROVEMENTS EXCEPT SANITARY SEWER AND WATER MAIN CONSTRUCTION;
   * STANDARD SPECIFICATIONS FOR WATER AND SEWER MAIN CONSTRUCTION IN ILLINOIS, LATEST EDITION (SSWS) FOR SANITARY SEWER AND WATER MAIN CONSTRUCTION;
   * VILLAGE OF _____ MUNICIPAL CODE;
   * THE METROPOLITAN WATER RECLAMATION DISTRICT OF GREATER CHICAGO (MWRD) WATERSHED MANAGEMENT ORDINANCE AND TECHNICAL GUIDANCE MANUAL;
   * IN CASE OF CONFLICT BETWEEN THE APPLICABLE ORDINANCES NOTED, THE MORE STRINGENT SHALL TAKE PRECEDENCE AND SHALL CONTROL ALL CONSTRUCTION.

B. NOTIFICATIONS

1. THE MWRD LOCAL SEWER SYSTEMS SECTION FIELD OFFICE MUST BE NOTIFIED AT LEAST TWO (2) WORKING DAYS PRIOR TO THE COMMENCEMENT OF ANY WORK (CALL 708-588-4055).

2. THE VILLAGE OF __PALATINE__ ENGINEERING DEPARTMENT AND PUBLIC MUST BE NOTIFIED AT LEAST 24 HOURS PRIOR TO THE START OF CONSTRUCTION AND PRIOR TO EACH PHASE OF WORK. CONTRACTOR SHALL DETERMINE ITEMS REQUIRING INSPECTION PRIOR TO START OF CONSTRUCTION OR EACH WORK PHASE.

3. THE CONTRACTOR SHALL NOTIFY ALL UTILITY COMPANIES PRIOR TO BEGINNING CONSTRUCTION FOR THE EXACT LOCATIONS OF UTILITIES AND FOR THEIR PROTECTION DURING CONSTRUCTION. IF EXISTING UTILITIES ARE ENCOUNTERED THAT CONFLICT IN LOCATION WITH NEW CONSTRUCTION, IMMEDIATELY NOTIFY THE ENGINEER SO THAT THE CONFLICT CAN BE RESOLVED. CALL J.U.L.I.E. AT 1-800-892-0123.

C. GENERAL NOTES

1. ALL ELEVATIONS SHOWN ON PLANS REFERENCE THE NORTH AMERICAN VERTICAL DATUM OF 1988 (NAVD88). CONVERSION FACTOR IS __0.28___ FT.

2. MWRD, THE MUNICIPALITY AND THE OWNER OR OWNER'S REPRESENTATIVE SHALL HAVE THE AUTHORITY TO INSPECT, APPROVE, AND REJECT THE CONSTRUCTION IMPROVEMENTS.

3. THE CONTRACTOR(S) SHALL INDEMNIFY THE OWNER, ENGINEER, MUNICIPALITY, MWRD, AND THEIR AGENTS, ETC., FROM ALL LIABILITY INVOLVED WITH THE CONSTRUCTION, INSTALLATION, OR TESTING OF THIS WORK ON THE PROJECT.

4. THE PROPOSED IMPROVEMENTS MUST BE CONSTRUCTED IN ACCORDANCE WITH THE ENGINEERING PLANS AS APPROVED BY MWRD AND THE MUNICIPALITY UNLESS CHANGES ARE APPROVED BY MWRD, THE MUNICIPALITY, OR AUTHORIZED AGENT. THE CONSTRUCTION DETAILS, AS PRESENTED ON THE PLANS, MUST BE FOLLOWED. PROPER CONSTRUCTION TECHNIQUES MUST BE FOLLOWED ON THE IMPROVEMENTS INDICATED ON THE PLANS.

5. THE LOCATION OF VARIOUS UNDERGROUND UTILITIES WHICH ARE SHOWN ON THE PLANS ARE FOR INFORMATION ONLY AND REPRESENT THE BEST KNOWLEDGE OF THE ENGINEER. VERIFY LOCATIONS AND ELEVATIONS PRIOR TO BEGINNING THE CONSTRUCTION OPERATIONS.

6. ANY EXISTING PAVEMENT, SIDEWALK, DRIVEWAY, ETC., DAMAGED DURING CONSTRUCTION OPERATIONS AND NOT CALLED FOR TO BE REMOVED SHALL BE REPLACED AT THE EXPENSE OF THE CONTRACTOR.

7. MATERIAL AND COMPACTION TESTING SHALL BE PERFORMED IN ACCORDANCE WITH THE REQUIREMENTS OF THE MUNICIPALITY, MWRD, AND OWNER.

8. THE UNDERGROUND CONTRACTOR SHALL MAKE ALL NECESSARY ARRANGEMENTS TO NOTIFY ALL INSPECTION AGENCIES.

9. ALL NEW AND EXISTING UTILITY STRUCTURES ON SITE AND IN AREAS DISTURBED DURING CONSTRUCTION SHALL BE ADJUSTED TO FINISH GRADE PRIOR TO FINAL INSPECTION.

10. RECORD DRAWINGS SHALL BE KEPT BY THE CONTRACTOR AND SUBMITTED TO THE ENGINEER AS SOON AS UNDERGROUND IMPROVEMENTS ARE COMPLETED. FINAL PAYMENTS TO THE CONTRACTOR SHALL BE HELD UNTIL THEY ARE RECEIVED. ANY CHANGES IN LENGTH, LOCATION OR ALIGNMENT SHALL BE SHOWN IN RED. ALL WYES OR BENDS SHALL BE LOCATED FROM THE DOWNSTREAM MANHOLE. ALL VALVES, B-BOXES, TEES OR BENDS SHALL BE TIED TO A FIRE HYDRANT.

D. SANITARY SEWER

1. THE CONTRACTOR SHALL TAKE MEASURES TO PREVENT ANY POLLUTED WATER, SUCH AS GROUND AND SURFACE WATER, FROM ENTERING THE EXISTING SANITARY SEWERS.

2. A WATER-TIGHT PLUG SHALL BE INSTALLED IN THE DOWNSTREAM SEWER PIPE AT THE POINT OF SEWER CONNECTION PRIOR TO COMMENCING ANY SEWER CONSTRUCTION. THE PLUG SHALL REMAIN IN PLACE UNTIL REMOVAL IS AUTHORIZED BY THE MUNICIPALITY AND/OR MWRD AFTER THE SEWERS HAVE BEEN TESTED AND ACCEPTED.

3. DISCHARGING ANY UNPOLLUTED WATER INTO THE SANITARY SEWER SYSTEM FOR THE PURPOSE OF SEWER FLUSHING OF LINES FOR THE DEFLECTION TEST SHALL BE PROHIBITED WITHOUT PRIOR APPROVAL FROM THE MUNICIPALITY OR MWRD.

4. ALL SANITARY SEWER CONSTRUCTION SHALL BE IN ACCORDANCE WITH THE STANDARD SPECIFICATIONS FOR WATER AND SEWER MAIN CONSTRUCTION IN ILLINOIS (LATEST EDITION).

5. ALL FLOOR DRAINS SHALL DISCHARGE TO THE SANITARY SEWER SYSTEM.

6. ALL DOWNSPOUTS AND FOOTING DRAINS SHALL DISCHARGE TO THE STORM SEWER SYSTEM.

7. ALL SANITARY SEWER PIPE MATERIALS AND JOINTS (AND STORM SEWER PIPE MATERIALS AND JOINTS IN A COMBINED SEWER AREA) SHALL CONFORM TO THE FOLLOWING:

PIPE MATERIAL	PIPE SPECIFICATIONS	JOINT SPECIFICATIONS
VITRIFIED CLAY PIPE	ASTM C-700	ASTM C-425
REINFORCED CONCRETE SEWER PIPE	ASTM C-76	ASTM C-443
CAST IRON SOIL PIPE	ASTM A-74	ASTM C-564
DUCTILE IRON PIPE	ANSI A21.51	ANSI A21.11
POLYVINYL CHLORIDE (PVC) PIPE		
6-INCH TO 15-INCH DIAMETER SDR 26	ASTM D-3034	ASTM D-2855 OR ASTM D-3212
18-INCH TO 27-INCH DIAMETER F/DY=46	ASTM F-679	ASTM D-3212
HIGH DENSITY POLYETHYLENE (HDPE)	ASTM D-3350	ASTM D-3261
WATER MAIN QUALITY PVC		
4-INCH TO 36-INCH	ASTM D-2241	ASTM D-2672 OR ASTM D-3139
4-INCH TO 12-INCH	AWWA C900	ASTM D-3212
14-INCH TO 48-INCH	AWWA C905	ASTM D-3212

8. ALL SANITARY SEWER CONSTRUCTION (AND STORM SEWER CONSTRUCTION IN COMBINED SEWER AREAS), REQUIRES STONE BEDDING WITH STONE ¼ " TO 1" IN SIZE, WITH MINIMUM BEDDING THICKNESS EQUAL TO ¼ THE OUTSIDE DIAMETER OF THE SEWER PIPE, BUT NOT LESS THAN FOUR (4) INCHES NOR MORE THAN EIGHT (8) INCHES. MATERIAL SHALL BE CA-11 OR CA-13 AND SHALL BE EXTENDED AT LEAST 12" ABOVE THE TOP OF THE PIPE WHEN USING PVC.

9. "BAND SEAL" OR SIMILAR NON-SHEAR FLEXIBLE-TYPE COUPLINGS SHALL BE USED IN THE CONNECTION OF SEWER PIPES OF DISSIMILAR MATERIALS.

10. ALL MANHOLES SHALL BE PROVIDED WITH BOLTED, WATERTIGHT COVERS. SANITARY LIDS SHALL BE CONSTRUCTED WITH A CONCEALED PICKHOLE AND WATERTIGHT GASKET WITH THE WORD "SANITARY" CAST INTO THE LID.

11. WHEN CONNECTING TO AN EXISTING SEWER MAIN BY MEANS OTHER THAN AN EXISTING WYE, TEE, OR AN EXISTING MANHOLE, ONE OF THE FOLLOWING METHODS SHALL BE USED:
    a) A CIRCULAR SAW-CUT OF SEWER MAIN BY PROPER TOOLS ("SHEWER-TAP" MACHINE OR SIMILAR) AND PROPER INSTALLATION OF HUBWYE SADDLE OR HUB-TEE SADDLE.
    b) REMOVE AN ENTIRE SECTION OF PIPE (BREAKING ONLY THE TOP OF ONE BELL) AND REPLACE WITH A WYE OR TEE BRANCH SECTION.
    c) WITH PIPE CUTTER, NEATLY AND ACCURATELY CUT OUT DESIRED LENGTH OF PIPE FOR INSERTION OF PROPER FITTING, USING "BAND SEAL" OR SIMILAR COUPLINGS TO HOLD IT FIRMLY IN PLACE.

12. WHENEVER A SANITARY/COMBINED SEWER CROSSES UNDER A WATERMAIN, THE MINIMUM VERTICAL DISTANCE FROM THE TOP OF THE SEWER TO THE BOTTOM OF THE WATERMAIN SHALL BE 18 INCHES. FURTHERMORE, A MINIMUM HORIZONTAL DISTANCE OF 10 FEET BETWEEN SANITARY/COMBINED SEWERS AND WATERMAINS SHALL BE MAINTAINED UNLESS: THE SEWER IS LAID IN A SEPARATE TRENCH, KEEPING A MINIMUM 18" VERTICAL SEPARATION; OR THE SEWER IS LAID IN THE SAME TRENCH WITH THE WATERMAIN LOCATED AT THE OPPOSITE SIDE ON A BENCH OF UNDISTURBED EARTH, KEEPING A MINIMUM 18" VERTICAL SEPARATION. IF EITHER THE VERTICAL OR HORIZONTAL DISTANCES DESCRIBED ABOVE CANNOT BE MAINTAINED, OR THE SEWER CROSSES ABOVE THE WATERMAIN, THE SEWER SHALL BE CONSTRUCTED TO WATERMAIN STANDARDS.

13. ALL EXISTING SEPTIC SYSTEMS SHALL BE ABANDONED. ABANDONED TANKS SHALL BE FILLED WITH GRANULAR MATERIAL OR REMOVED.

14. ALL SANITARY MANHOLES, (AND STORM MANHOLES IN COMBINED SEWER AREAS), SHALL HAVE A MINIMUM INSIDE DIAMETER OF 48 INCHES, AND SHALL BE CAST IN PLACE OR PRE-CAST REINFORCED CONCRETE.

15. ALL SANITARY MANHOLES, (AND STORM MANHOLES IN COMBINED SEWER AREAS), SHALL HAVE PRECAST "RUBBER BOOTS" THAT CONFORM TO ASTM C-923 FOR ALL PIPE CONNECTIONS. PRECAST SECTIONS SHALL CONSIST OF MODIFIED GROOVE TONGUE AND RUBBER GASKET TYPE JOINTS.

16. ALL ABANDONED SANITARY SEWERS SHALL BE PLUGGED AT BOTH ENDS WITH AT LEAST 2 FEET LONG NON-SHRINK CONCRETE OR MORTAR PLUG.

17. EXCEPT FOR FOUNDATION/FOOTING DRAINS PROVIDED TO PROTECT BUILDINGS, OR PERFORATED PIPES ASSOCIATED WITH VOLUME CONTROL FACILITIES, DRAIN TILES/FIELD TILES/UNDERDRAINS/PERFORATED PIPES ARE NOT ALLOWED TO BE CONNECTED TO OR TRIBUTARY TO COMBINED SEWERS, SANITARY SEWERS, OR STORM SEWERS TRIBUTARY TO COMBINED SEWERS IN COMBINED SEWER AREAS. CONSTRUCTION OF NEW FACILITIES OF THIS TYPE IS PROHIBITED; AND ALL EXISTING DRAIN TILES AND PERFORATED PIPES ENCOUNTERED WITHIN THE PROJECT AREA SHALL BE PLUGGED OR REMOVED, AND SHALL NOT BE CONNECTED TO COMBINED SEWERS, SANITARY SEWERS, OR STORM SEWERS TRIBUTARY TO COMBINED SEWERS.

18. A BACKFLOW PREVENTER IS REQUIRED FOR ALL DETENTION BASINS TRIBUTARY TO COMBINED SEWERS. REQUIRED BACKFLOW PREVENTERS SHALL BE INSPECTED AND EXERCISED ANNUALLY BY THE PROPERTY OWNER TO ENSURE PROPER OPERATION, AND ANY NECESSARY MAINTENANCES SHALL BE PERFORMED TO ENSURE FUNCTIONALITY. IN THE EVENT OF A SEWER SURCHARGE INTO AN OPEN DETENTION BASIN TRIBUTARY TO COMBINED SEWERS, THE PERMITTEE SHALL ENSURE THAT CLEAN UP AND WASH OUT OF SEWAGE TAKES PLACE WITHIN 48 HOURS OF THE STORM EVENT.

E. EROSION AND SEDIMENT CONTROL

1. THE CONTRACTOR SHALL INSTALL THE EROSION AND SEDIMENT CONTROL DEVICES AS SHOWN ON THE APPROVED EROSION AND SEDIMENT CONTROL PLAN.

2. EROSION AND SEDIMENT CONTROL PRACTICES SHALL BE FUNCTIONAL PRIOR TO HYDROLOGIC DISTURBANCE OF THE SITE.

3. ALL DESIGN CRITERIA, SPECIFICATIONS, AND INSTALLATION OF EROSION AND SEDIMENT CONTROL PRACTICES SHALL BE IN ACCORDANCE WITH THE ILLINOIS URBAN MANUAL.

4. A COPY OF THE APPROVED EROSION AND SEDIMENT CONTROL PLAN SHALL BE MAINTAINED ON THE SITE AT ALL TIMES.

5. INSPECTIONS AND DOCUMENTATION SHALL BE PERFORMED, AT A MINIMUM:
   a) UPON COMPLETION OF INITIAL EROSION AND SEDIMENT CONTROL MEASURES, PRIOR TO ANY SOIL DISTURBANCE.
   b) ONCE EVERY SEVEN (7) CALENDAR DAYS AND WITHIN 24 HOURS OF THE END OF A STORM EVENT WITH GREATER THAN 0.5 INCH OF RAINFALL OR LIQUID EQUIVALENT PRECIPITATION.

6. SOIL DISTURBANCE SHALL BE CONDUCTED IN SUCH A MANNER AS TO MINIMIZE EROSION. IF STRIPPING, CLEARING, GRADING, OR LANDSCAPING ARE TO BE DONE IN PHASES, THE CO-PERMITTEE SHALL PLAN FOR APPROPRIATE SOIL EROSION AND SEDIMENT CONTROL MEASURES.

7. A STABILIZED MAT OF CRUSHED STONE MEETING THE STANDARDS OF THE ILLINOIS URBAN MANUAL SHALL BE INSTALLED AT ANY POINT WHERE TRAFFIC WILL BE ENTERING OR LEAVING A CONSTRUCTION SITE. SEDIMENT OR SOIL REACHING AN IMPROVED PUBLIC RIGHT?OF?WAY, STREET, ALLEY OR PARKING AREA SHALL BE REMOVED BY SCRAPING OR STREET CLEANING AS ACCUMULATIONS WARRANT AND TRANSPORTED TO A CONTROLLED SEDIMENT DISPOSAL AREA.

8. CONCRETE WASHOUT FACILITIES SHALL BE CONSTRUCTED IN ACCORDANCE WITH THE ILLINOIS URBAN MANUAL AND SHALL BE INSTALLED PRIOR TO ANY ON SITE CONSTRUCTION ACTIVITIES INVOLVING CONCRETE.

9. TEMPORARY DIVERSIONS SHALL BE CONSTRUCTED AS NECESSARY TO DIRECT ALL RUNOFF FROM HYDROLOGICALLY DISTURBED AREAS TO AN APPROPRIATE SEDIMENT TRAP OR BASIN. VOLUME CONTROL FACILITIES SHALL NOT BE USED AS TEMPORARY SEDIMENT BASINS.

10. DISTURBED AREAS OF THE SITE WHERE CONSTRUCTION ACTIVITIES HAVE TEMPORARILY OR PERMANENTLY CEASED SHALL BE STABILIZED WITH TEMPORARY OR PERMANENT MEASURES WITHIN SEVEN (7) DAYS.

11. ALL FLOOD PROTECTION AREAS AND VOLUME CONTROL FACILITIES SHALL, AT A MINIMUM, BE PROTECTED WITH A DOUBLE-ROW OF SILT FENCE (OR EQUIVALENT).

12. VOLUME CONTROL FACILITIES SHALL NOT BE CONSTRUCTED UNTIL ALL OF THE CONTRIBUTING DRAINAGE AREA HAS BEEN STABILIZED.

13. SOIL STOCKPILES SHALL, AT A MINIMUM, BE PROTECTED WITH PERIMETER SEDIMENT CONTROLS. SOIL STOCKPILES SHALL NOT BE PLACED IN FLOOD PROTECTION AREAS OR THEIR BUFFERS.

14. EARTHEN EMBANKMENT SIDE SLOPES SHALL BE STABILIZED WITH APPROPRIATE EROSION CONTROL BLANKET.

15. STORM SEWERS THAT ARE OR WILL BE FUNCTIONING DURING CONSTRUCTION SHALL BE PROTECTED BY APPROPRIATE SEDIMENT CONTROL MEASURES.

16. THE CONTRACTOR SHALL EITHER REMOVE OR REPLACE ANY EXISTING DRAIN TILES AND INCORPORATE THEM INTO THE DRAINAGE PLAN FOR THE DEVELOPMENT. DRAIN TILES CANNOT BE TRIBUTARY TO A SANITARY OR COMBINED SEWER.

17. IF DEWATERING SERVICES ARE USED, ADJOINING PROPERTIES AND DISCHARGE LOCATIONS SHALL BE PROTECTED FROM EROSION AND SEDIMENTATION. DEWATERING SYSTEMS SHOULD BE INSPECTED DAILY DURING OPERATIONAL PERIODS. THE SITE INSPECTOR MUST BE PRESENT AT THE COMMENCEMENT OF DEWATERING ACTIVITIES.

18. THE CONTRCTOR SHALL BE RESPONSIBLE FOR TRENCH DEWATERING AND EXCAVATION FOR THE INSTALLATION OF SANITARY SEWERS, STORM SEWERS, WATERMAINS AS WELL AS THEIR SERVICES AND OTHER APPURTENANCES. ANY TRENCH DEWATERING, WHICH CONTAINS SEDIMENT SHALL PASS THROUGH A SEDIMENT SETTLING POND OR EQUALLY EFFECTIVE SEDIMENT CONTROL DEVICE. ALTERNATIVES MAY INCLUDE DEWATERING INTO A SUMP PIT, FILTER BAG OR EXISTING VEGETATED UPSLOPE AREA. SEDIMENT LADEN WATERS SHALL NOT BE DISCHARGE TO WATERWAYS, FLOOD PROTECTION AREAS OR THE COMBINED SEWER SYSTEM.

19. ALL PERMANENT EROSION CONTROL PRACTICES SHALL BE INITIATED WITHIN SEVEN (7) DAYS FOLLOWING THE COMPLETION OF SOIL DISTURBING ACTIVITIES.

20. ALL EROSION AND SEDIMENT CONTROL MEASURES SHALL BE MAINTAINED AND REPAIRED AS NEEDED ON A YEAR-ROUND BASIS DURING CONSTRUCTION AND ANY PERIODS OF CONSTRUCTION SHUTDOWN UNTIL PERMANENT STABILIZATION IS ACHIEVED.

21. ALL TEMPORARY EROSION AND SEDIMENT CONTROL MEASURES SHALL BE REMOVED WITHIN THIRTY (30) DAYS AFTER PERMANENT SITE STABILIZATION.

22. THE EROSION AND SEDIMENT CONTROL MEASURES SHOWN ON THE PLANS ARE THE MINIMUM REQUIREMENTS. ADDITIONAL MEASURES MAY BE REQUIRED, AS DIRECTED BY THE ENGINEER, SITE INSPECTOR, OR MWRD.

SPIES & ASSOCIATES, INC.
Civil Engineers – Land Surveyors
534 WEST CAMPUS DRIVE
ARLINGTON HEIGHTS, ILLINOIS 60004
PH 847.577.8808 FAX 847.577.0229

REVISIONS

DRAWN BY: TJS	JOB NO. 5144
DESIGNED BY: TJS	SCALE:
CHECKED BY: TJS	DATE: 06-06-18

MWRD GENERAL NOTES
HILLSIDE SUBDIVISION

Attachment: ENG Plans 833 W. Hillside Street (833 W. Hillside Street - 4-lot subdivision)

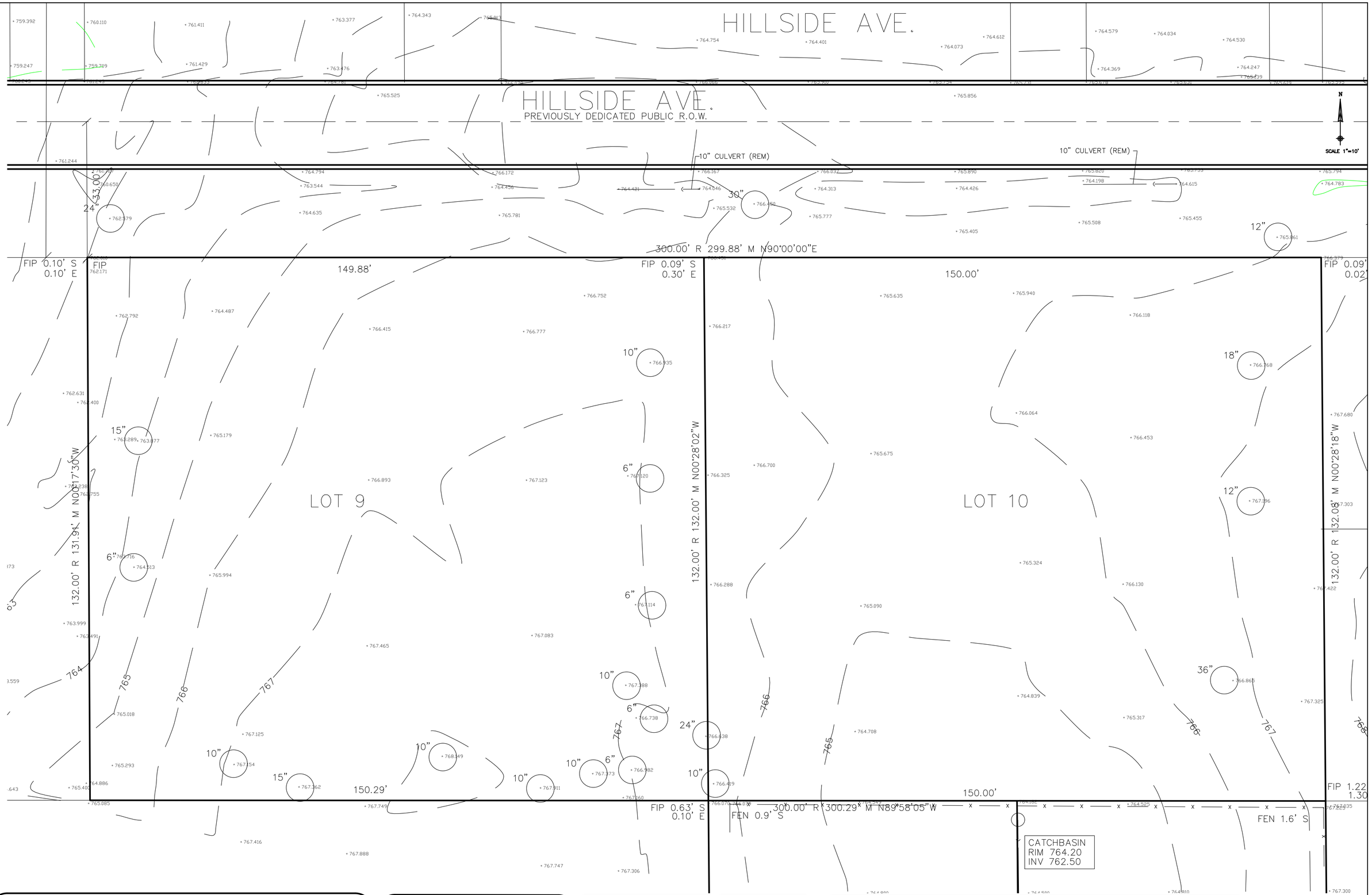

SPIES & ASSOCIATES, INC.
Civil Engineers – Land Surveyors

534 WEST CAMPUS DRIVE
ARLINGTON HEIGHTS, ILLINOIS 60004
PH 847.577.8808 FAX 847.577.0229

REVISIONS

DRAWN BY: TJS	JOB NO. 5144
DESIGNED BY: TJS	SCALE: 1"=40'
CHECKED BY: TJS	DATE: 06-06-18

EXISTING CONDITIONS
HILLSIDE SUBDIVISION

SHEET NO. 4 OF 8 SHEETS

Attachment: ENG Plans 833 W. Hillside Street (833 W. Hillside Street - 4-lot subdivision)

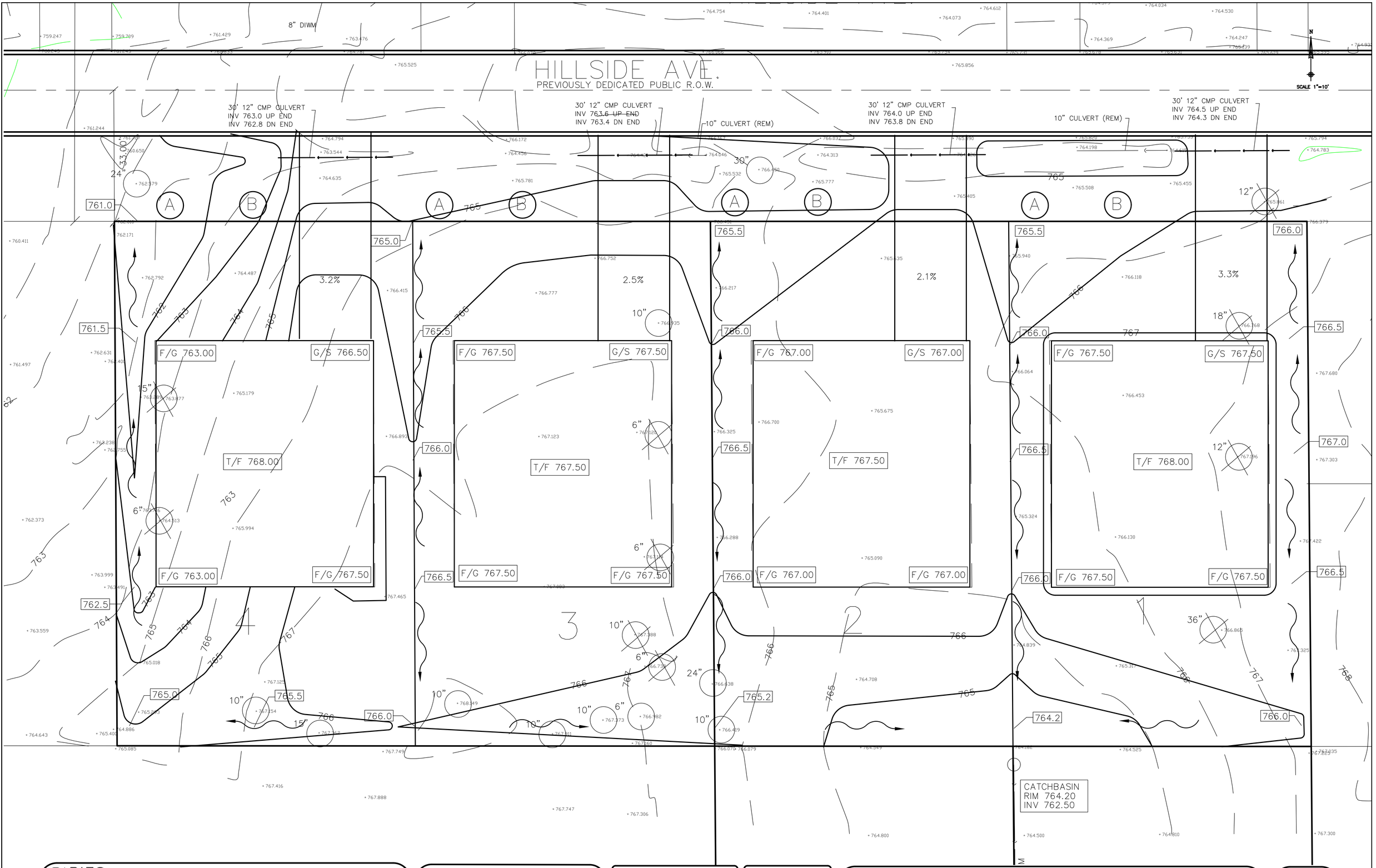

SPIES & ASSOCIATES, INC.
Civil Engineers – Land Surveyors

534 WEST CAMPUS DRIVE
ARLINGTON HEIGHTS, ILLINOIS 60004
PH 847.577.8808 FAX 847.577.0229

REVISIONS

DRAWN BY: TJS	JOB NO. 5144
DESIGNED BY: TJS	SCALE: 1"=10'
CHECKED BY: TJS	DATE: 06-06-18

GRADING PLAN
HILLSIDE SUBDIVISION

SHEET NO. 5 OF 8 SHEETS

Attachment: ENG Plans 833 W. Hillside Street (833 W. Hillside Street - 4-lot subdivision)

ALL DITCHES AND BACK SLOPES SHALL BE RESTORED TO THEIR ORIGINAL CONDITION UPON COMPLETION OF THE SANITARY SEWER EXTENTION.

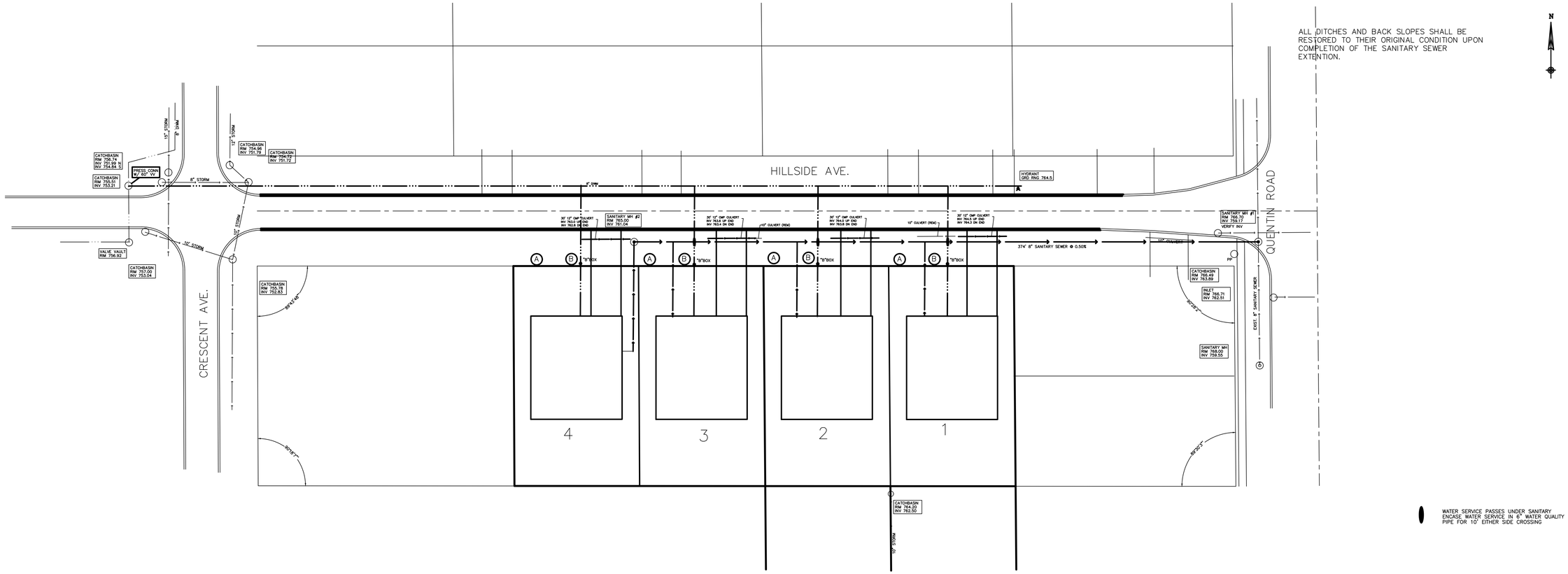

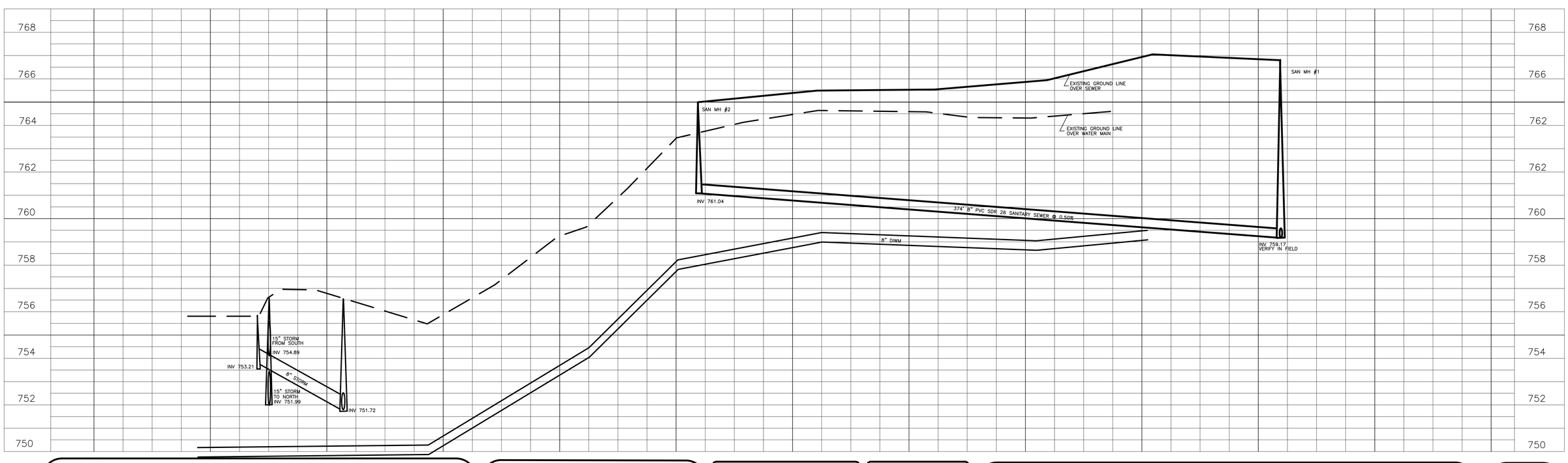

SPIES & ASSOCIATES, INC.
Civil Engineers – Land Surveyors
534 WEST CAMPUS DRIVE
ARLINGTON HEIGHTS, ILLINOIS 60004
PH 847.577.8808 FAX 847.577.0229

REVISIONS

DRAWN BY: TJS	JOB NO. 5144
DESIGNED BY: TJS	SCALE: 1"=30'
CHECKED BY: TJS	DATE: 06-06-18

HILLSIDE AVENUE PROFILE
HILLSIDE SUBDIVISION

SHEET NO. 6 OF 8 SHEETS

Attachment: ENG Plans 833 W. Hillside Street (833 W. Hillside Street - 4-lot subdivision)

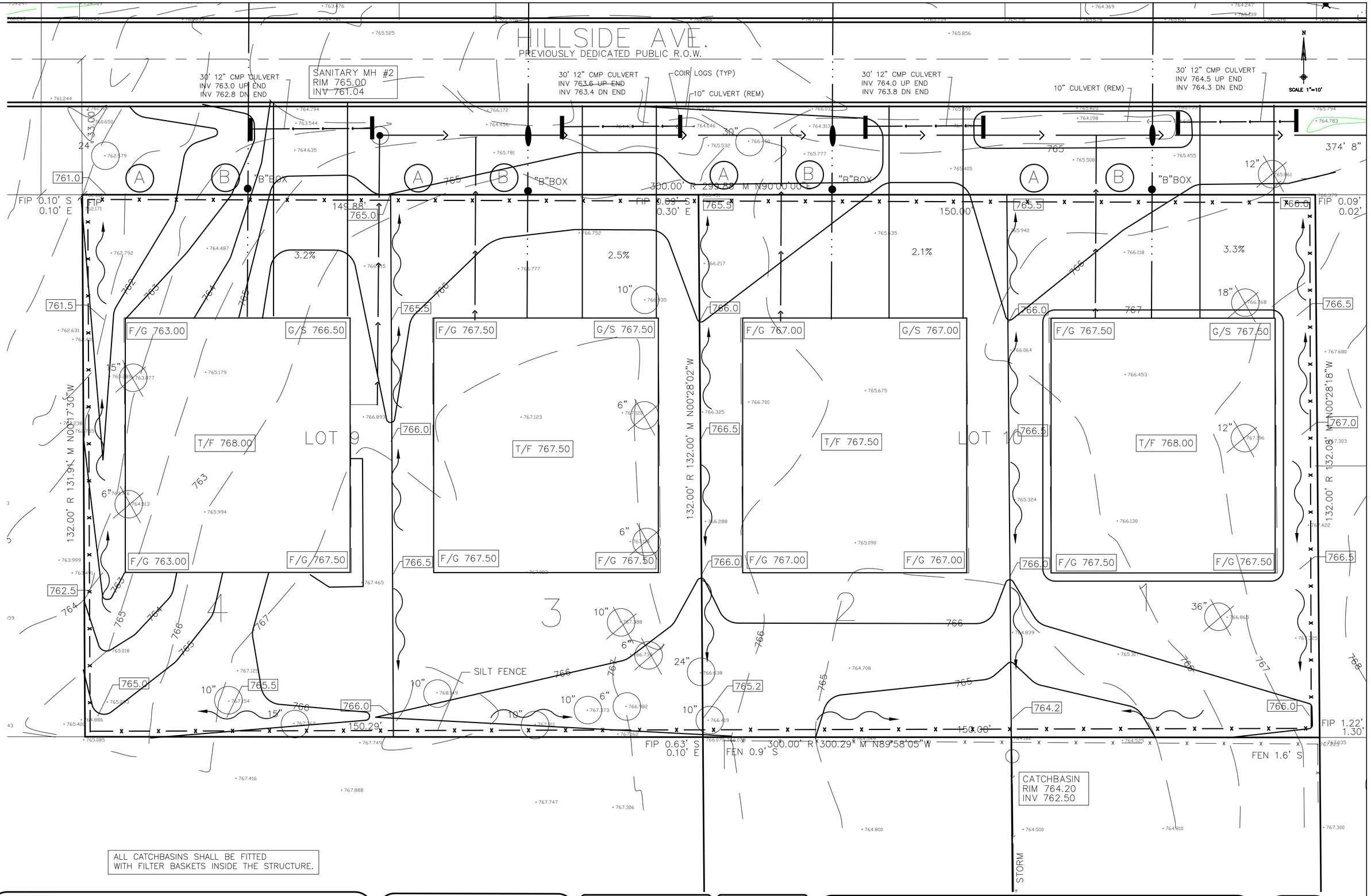

SPIES & ASSOCIATES, INC.
Civil Engineers – Land Surveyors

534 WEST CAMPUS DRIVE
ARLINGTON HEIGHTS, ILLINOIS 60004
PH 847.577.8808 FAX 847.577.0229

REVISIONS

DRAWN BY: TJS	JOB NO. 5144
DESIGNED BY: TJS	SCALE: 1"=10'
CHECKED BY: TJS	DATE: 06-06-18

EROSION CONTROL/TREE PLAN
HILLSIDE SUBDIVISION

SHEET NO. 7 OF 8 SHEETS

Attachment: ENG Plans 833 W. Hillside Street (833 W. Hillside Street - 4-lot subdivision)

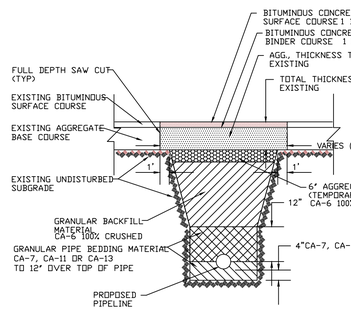

PAVEMENT TRENCH DETAIL
NTS

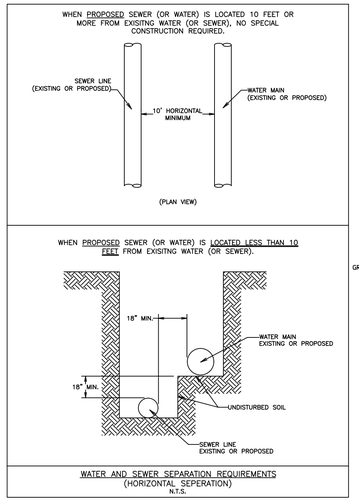

WATER AND SEWER SEPARATION REQUIREMENTS
(HORIZONTAL SEPERATION)
N.T.S.

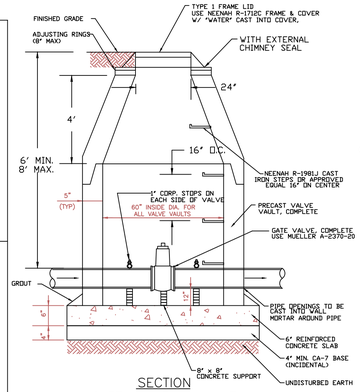

SECTION
GATE VALVE & VAULT
N.T.S.

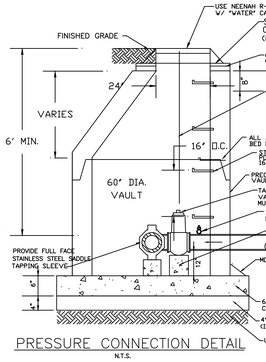

PRESSURE CONNECTION DETAIL
N.T.S.

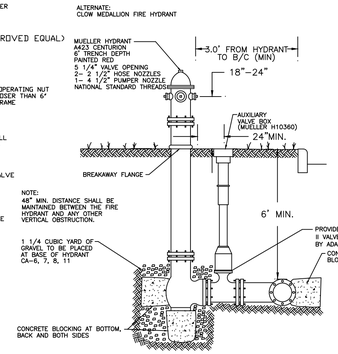

FIRE HYDRANT ASSEMBLY
N.T.S.

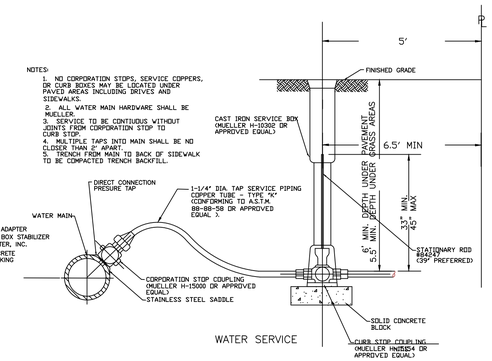

WATER SERVICE

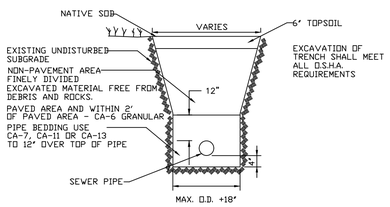

SEWER PIPE BEDDING DETAIL
N.T.S.

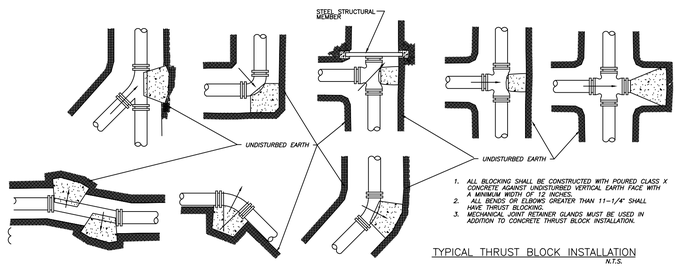

1. ALL BLOCKING SHALL BE CONSTRUCTED WITH POURED CLASS X CONCRETE AGAINST UNDISTURBED VERTICAL EARTH FACE WITH A MINIMUM WIDTH OF 12 INCHES.
2. ALL BENDS OR ELBOWS GREATER THAN 11-1/4° SHALL HAVE THRUST BLOCKING.
3. MECHANICAL JOINT RETAINER GLANDS MUST BE USED IN ADDITION TO CONCRETE THRUST BLOCK INSTALLATION.

TYPICAL THRUST BLOCK INSTALLATION
N.T.S.

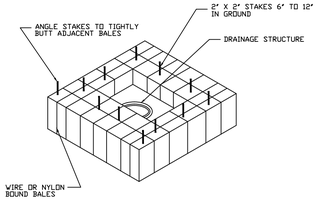

TYPICAL HAY BALE PLACEMENT
N.T.S.

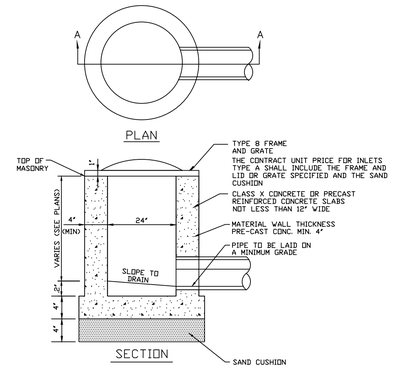

TYPE "A" INLET
NTS

STABILIZED CONSTRUCTION ENTRANCE PLAN

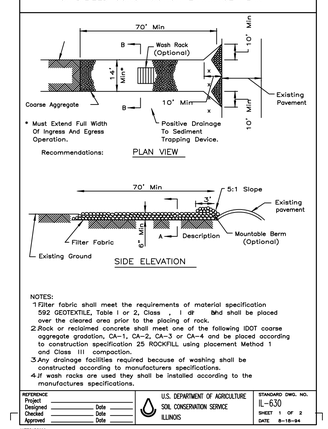

NOTES:
1. Filter fabric shall meet the requirements of material specification 592 GEOTEXTILE, Table I or 2, Class , I or II and shall be placed over the cleared area prior to the placing of rock.
2. Rock or reclaimed concrete shall meet one of the following IDOT coarse aggregate gradation, CA-1, CA-2, CA-3 or CA-4 and be placed according to construction specification 25 ROCKFILL using placement Method 1 and Class III compaction.
3. Any drainage facilities required because of washing shall be constructed according to manufacturers specifications.
4. If wash racks are used they shall be installed according to the manufactures specifications.

REFERENCE			U.S. DEPARTMENT OF AGRICULTURE SOIL CONSERVATION SERVICE ILLINOIS	STANDARD DWG. NO. IL-630
Project				SHEET 1 OF 2
Designed		Date		DATE 8-18-94
Checked		Date		
Approved		Date		

AUTOCADDWG

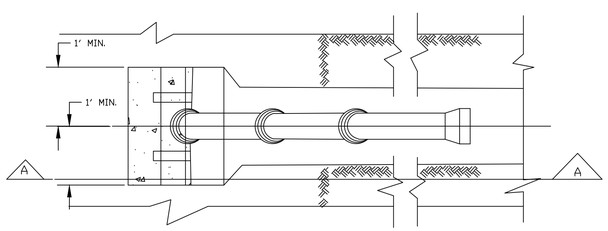

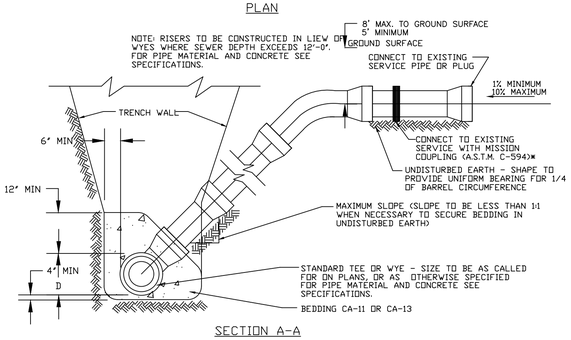

SECTION A-A
SANITARY SERVICE RISER
N.T.S.

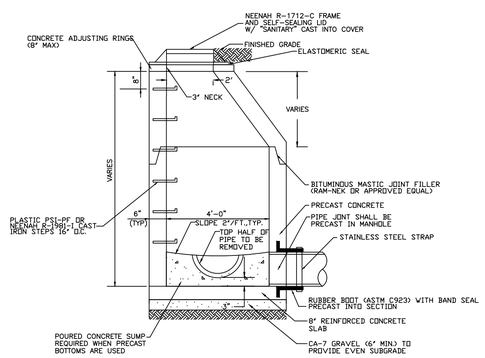

SANITARY MANHOLE DETAIL
N.T.S.

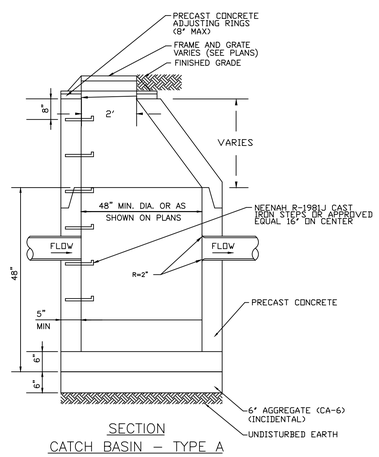

SECTION
CATCH BASIN - TYPE A
N.T.S.

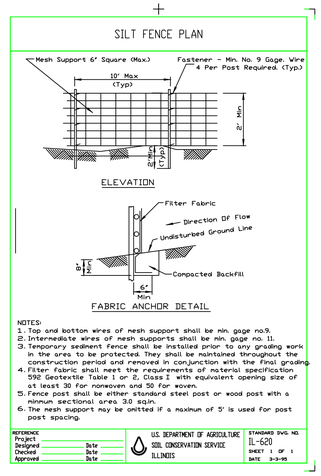

NOTES:
1. Top and bottom wires of mesh support shall be min. gage no.9.
2. Intermediate wires of mesh supports shall be min. gage no. 11.
3. Temporary sediment fence shall be installed prior to any grading work in the area to be protected. They shall be maintained throughout the construction period and removed in conjunction with the final grading.
4. Filter fabric shall meet the requirements of material specification 592 Geotextile Table I or 2, Class I with equivalent opening size of at least 30 for nonwoven and 50 for woven.
5. Fence post shall be either standard steel post or wood post with a minimum sectional area 3.0 sq.in.
6. The mesh support may be omitted if a maximum of 5' is used for post post spacing.

REFERENCE			U.S. DEPARTMENT OF AGRICULTURE SOIL CONSERVATION SERVICE ILLINOIS	STANDARD DWG. NO. IL-620
Project				SHEET 1 OF 1
Designed		Date		DATE 3-3-95
Checked		Date		
Approved		Date		

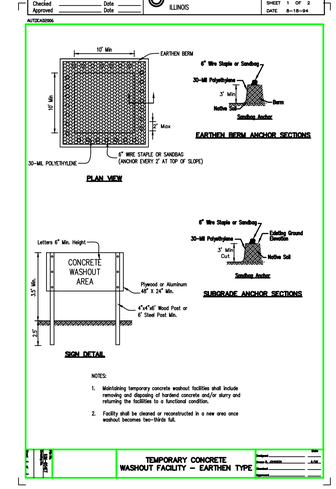

NOTES:
1. Maintaining temporary concrete washout facilities shall include removing and disposing of hardend concrete and/or slurry and returning the facilities to a functional condition.
2. Facility shall be cleaned or reconstructed in a new area once washout becomes two-thirds full.

Approved	TEMPORARY CONCRETE WASHOUT FACILITY - EARTHEN TYPE	Date

SPIES & ASSOCIATES, INC.
Civil Engineers - Land Surveyors
534 WEST CAMPUS DRIVE
ARLINGTON HEIGHTS, ILLINOIS 60004
PH 847.577.8808 FAX 847.577.0229

REVISIONS

DRAWN BY: TJS	JOB NO. 5144
DESIGNED BY: TJS	SCALE:
CHECKED BY: TJS	DATE: 06-06-18

DETAIL SHEET
HILLSIDE SUBDIVISION

SHEET NO. 8 OF 8 SHEETS

Attachment: ENG Plans 833 W. Hillside Street (833 W. Hillside Street - 4-lot subdivision)

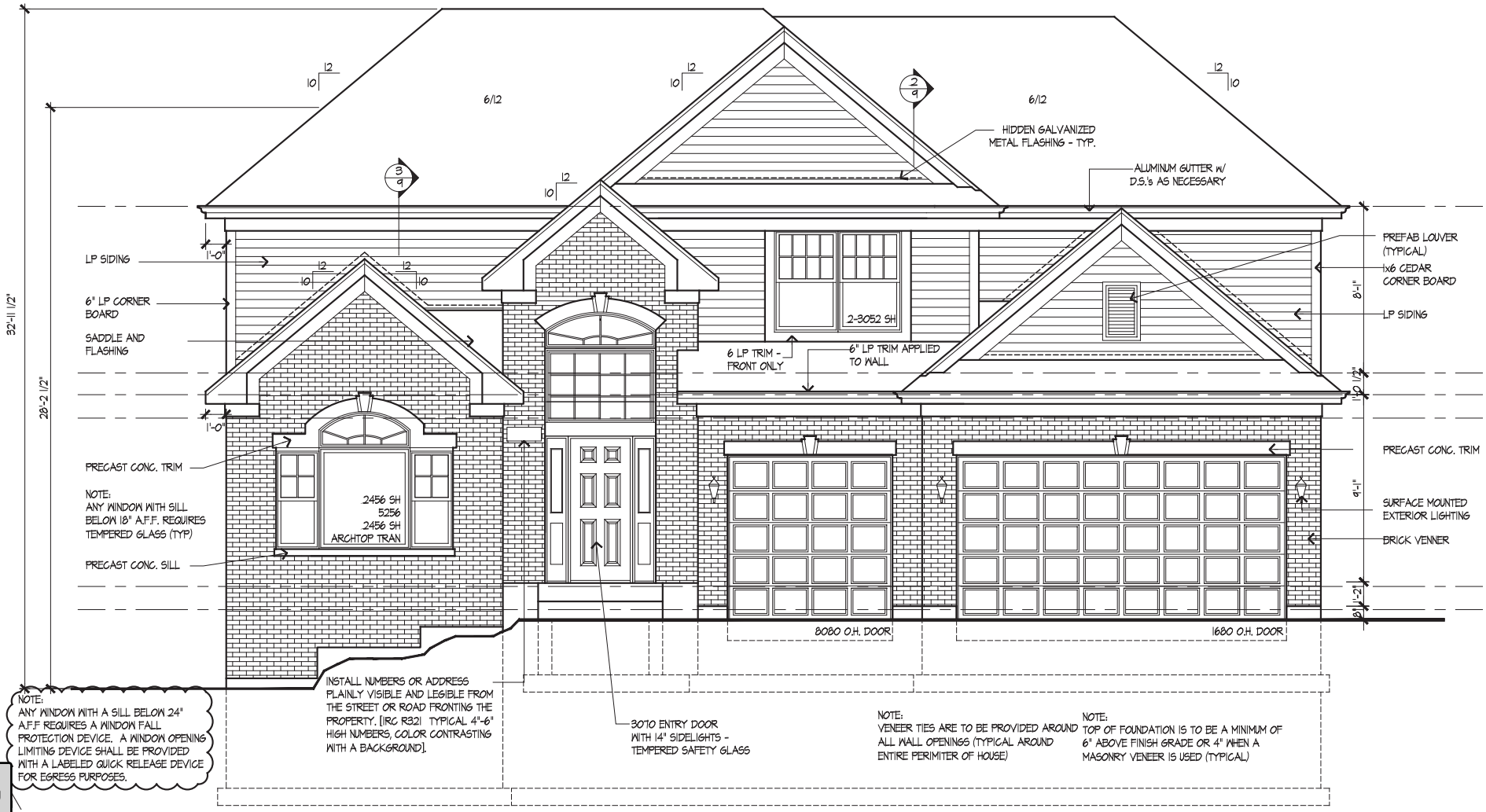
32'-11 1/2"
28'-2 1/2"
6/12
6/12
HIDDEN GALVANIZED METAL FLASHING - TYP.
ALUMINUM GUTTER w/ D.S.'s AS NECESSARY
PREFAB LOUVER (TYPICAL)
1x6 CEDAR CORNER BOARD
LP SIDING
LP SIDING
6" LP CORNER BOARD
SADDLE AND FLASHING
1'-0"
1'-0"
2-3052 SH
6 LP TRIM - FRONT ONLY
6" LP TRIM APPLIED TO WALL
PRECAST CONC. TRIM
PRECAST CONC. TRIM
NOTE:
ANY WINDOW WITH SILL BELOW 18" A.F.F. REQUIRES TEMPERED GLASS (TYP)
2456 SH
5256
2456 SH
ARCHTOP TRAN
PRECAST CONC. SILL
SURFACE MOUNTED EXTERIOR LIGHTING
BRICK VENNER
8'-1"
1'-0 1/2"
8'-1"
8'-2"
8080 O.H. DOOR
1680 O.H. DOOR
NOTE:
ANY WINDOW WITH A SILL BELOW 24" A.F.F REQUIRES A WINDOW FALL PROTECTION DEVICE. A WINDOW OPENING LIMITING DEVICE SHALL BE PROVIDED WITH A LABELED QUICK RELEASE DEVICE FOR EGRESS PURPOSES.
INSTALL NUMBERS OR ADDRESS PLAINLY VISIBLE AND LEGIBLE FROM THE STREET OR ROAD FRONTING THE PROPERTY. [IRC R321 TYPICAL 4"-6" HIGH NUMBERS, COLOR CONTRASTING WITH A BACKGROUND].
3070 ENTRY DOOR WITH 14" SIDELIGHTS - TEMPERED SAFETY GLASS
NOTE:
VENEER TIES ARE TO BE PROVIDED AROUND ALL WALL OPENINGS (TYPICAL AROUND ENTIRE PERIMITER OF HOUSE)
NOTE:
TOP OF FOUNDATION IS TO BE A MINIMUM OF 6" ABOVE FINISH GRADE OR 4" WHEN A MASONRY VENEER IS USED (TYPICAL)

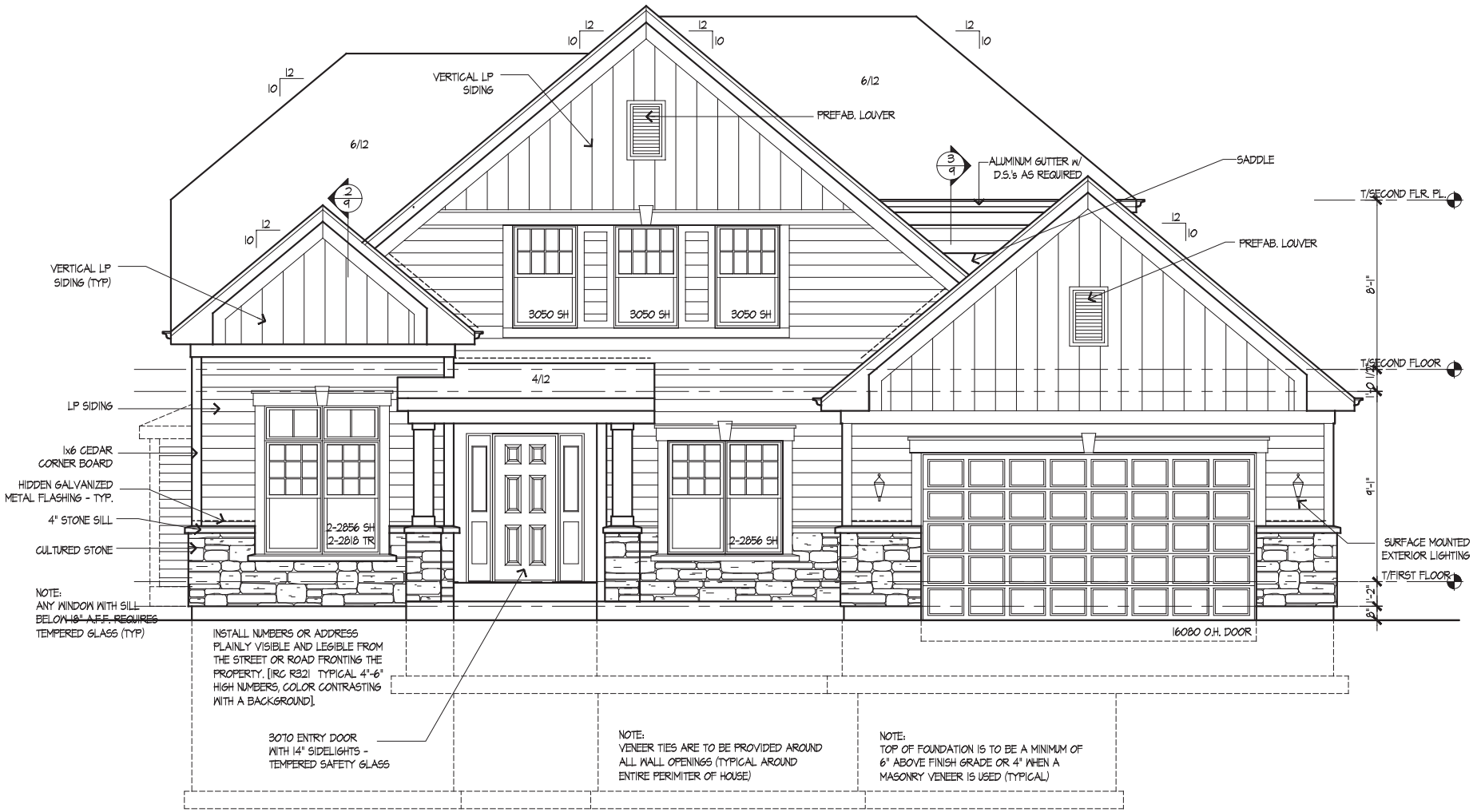

Attachment: Elevations 833 W. Hillside Street (833 W. Hillside Street - 4-lot subdivision)

PUBLIC NOTICE
A public hearing will be held before the Palatine Plan Commission on Tuesday, August 21, 2018 at 7:00 PM, in the Village Council Chambers in the Palatine Village Hall, 200 E. Wood Street, relative to a request for the following:
1. Preliminary and Final Plat of Subdivision to permit a 4-lot single-family residential development
2. Rezoning from R-1 Single Family Residential to R-2 Single-Family Residential
3. Variation to permit a lot width of 74 feet for Lot 3 instead of the minimum required 75 feet
The property is commonly known as 833 W. Hillside Street (PIN# 02-21-211-002 and 02-21-211-003).
The Petitioner is requesting to subdivide the 2 vacant single-family residential lots into 4 single-family residential lots.
The above petition has been filed by Greg Rose – KF Walter Inc. and is available for examination in the office of the Village Clerk, 200 E. Wood Street.
FILE #: 18-67
VILLAGE OF PALATINE
Dennis Dwyer, Chair
Palatine Plan Commission
DATED: This 6th day of August 2018.
Published in Daily Herald August 6, 2018 (4506551)

CERTIFICATE OF PUBLICATION

Paddock Publications, Inc.

Daily Herald

Corporation organized and existing under and by virtue of the laws of the State of Illinois, DOES HEREBY CERTIFY that it is the publisher of the **DAILY HERALD**. That said **DAILY HERALD** is a secular newspaper and has been circulated daily in the Village(s) of Algonquin,Antioch,Arlington Heights,Aurora,North Aurora,Bannockburn, Barrington,Barrington Hills,Lake Barrington,North Barrington,South Barrington,Bartlett,Batavia,Buffalo Grove,Burlington,Campton Hills, Carpentersville,Cary,Crystal Lake,Deerfield,Deer Park,Des Plaines,Elburn, East Dundee,Elgin,South Elgin,Elk Grove Village,Fox Lake, Fox River Grove,Franklin Park,Geneva,Gilberts,Glenview,Grayslake, Green Oaks,Gurnee,Hainesville,Hampshire,Hanover Park,Hawthorn Woods, Highland Park,Highwood,Hoffman Estates,Huntley,Inverness,Island Lake, Kildeer,Lake Bluff,Lake Forest,Lake in the Hills,Lake Villa,Lake Zurich, Libertyville,Lincolnshire,Lindenhurst,Long Grove,Melrose Park,Montgomery Morton Grove,Mt.Prospect,Mundelein,Niles,Northbrook,Northfield,Northlake Palatine,Park Ridge,Prospect Heights,River Grove,Riverwoods, Rolling Meadows,Rosemont,Round Lake,Round Lake Beach,Round Lake Heights,Round Lake Park,Schaumburg,Schiller Park,Sleepy Hollow, St. Charles,Streamwood,Sugar Grove,Third Lake,Tower Lakes,Vernon Hills, Volo,Wadsworth,Wauconda,Waukegan,West Dundee,Wheeling,Wildwood, Wilmette

County(ies) of Cook, Kane, Lake, McHenry
and State of Illinois, continuously for more than one year prior to the date of the first publication of the notice hereinafter referred to and is of general circulation throughout said Village(s), County(ies) and State.

I further certify that the DAILY HERALD is a newspaper as defined in "an Act to revise the law in relation to notices" as amended in 1992 Illinois Compiled Statutes, Chapter 715, Act 5, Section 1 and 5. That a notice of which the annexed printed slip is a true copy, was published August 6, 2018 in said DAILY HERALD.

IN WITNESS WHEREOF, the undersigned, the said PADDOCK PUBLICATIONS, Inc., has caused this certificate to be signed by, this authorized agent, at Arlington Heights, Illinois.

PADDOCK PUBLICATIONS, INC.
DAILY HERALD NEWSPAPERS

BY Paula Raltzer
Authorized Agent

Control # 4506551

Attachment: Public Notice 833 W. Hillside Street (833 W. Hillside Street - 4-lot subdivision)

VILLAGE OF PALATINE

VILLAGE OF PALATINE
Plan Commission

SCHEDULED 08/21/18 07:00 PM

CASE STAFF STATEMENT (ID # 4678)

1500, 1532, and 1548 N. Hicks Road

CASE NUMBER: **18-21**

PETITIONER: Greg Rose (K F Walter Inc.)

LOCATION: 1500, 1532, and 1548 N. Hicks Road

PROPOSAL: Preliminary and Final Planned Development; Preliminary and Final Plat of Subdivision to allow 12 ranch-style townhomes

ZONING AND LAND USE: The subject properties consists of 3 platted lots, which are presently zoned R-1 single family residential and consist of 2 vacant lots (south) and 1 lot improved (north) with an unoccupied single-family residential home.

SURROUNDING ZONING AND LAND USES:

North:	B-2; General business - Walgreens, with drive through and GNI Resubdivision - (13,000 SF unified commercial center)
South:	R-1 and R-2 single-family residential properties farther south along Hicks Road
East:	Planned Development (Northwest Shopping Center - 9.75 acre commercial shopping center)
West:	R-1 single-family residential properties

BACKGROUND:

- The Subject Property is part of the Home Garden Acres subdivision, which is zoned R-1 and was platted in 1928 and annexed into the Village in 1994. Home Garden Acres includes the all of the lots bounded by Dundee Road (north), Oak Street (west), Home Avenue (south), and Hick Road (east). In 1997, the commercial properties directly north of the subject property were subdivided and redeveloped into commercial developments.

- The Petitioner withdrew the initial Preliminary Planned Development application and has reapplied for Preliminary and Final Planned Development and Preliminary and Final Subdivision to allow for a 12-unit ranch style townhouse development. Subsequent to the initial Plan Commission Public Hearing in May, the Petitioner also hosted a neighborhood meeting on July 18th at Village Hall.

Notices for this meeting were sent all of the residents and property owners within the area and approximately 14 participants attending this meeting, with the Petitioner/Engineer and Staff.

COMPREHENSIVE PLAN:

- The 1990 Comprehensive Plan, was amended in 1995, to alter the land use recommendation for the area bounded by Dundee Road, Elm Street, Garden Avenue, and Hicks Road.
- The adoption of the Dundee Road Tax Increment Finance Redevelopment Plan in 1995, formally changed the underlying future land use recommendation from single-family residential to commercial for this area. This allowed for the commercial redevelopment of not only the properties directly north of the Subject Property, but would have also allowed for the recommended commercial land uses for the remaining lots in this area.
- The 2010 Comprehensive Plan further created and identified the Dundee Hicks Subarea - bounded by Dundee Road (north), Hicks Road (east), Garden Avenue (south) and Elm Street. The Subarea plan noted the adjacency of the commercial properties fronting on Dundee Road and Northwest Shopping Center to the east. The final analysis recommended consideration of an office use.

ANALYSIS:

Zoning and Site Design

- The proposed development is a 12-unit townhouse. The units are accessed through a 28-foot (back of curb to back of curb) private road, which ends within a hammerhead. The buildings are located on either side (two 3-unit buildings on the west and east sides) of the private road. The proposed road has full access onto Garden Avenue and the curb cut is approximately 130 feet from Hicks Road.
- Each unit has a 2-car garage and 2 parking spaces on the driveway (19 feet wide by 26 feet deep). There are also four additional parking spaces (total) divided on the west and east sides of the road. With the 2 garage spaces and 2 driveway spaces, there are a total of 48 spaces for the 12 units, plus 4 additional spaces for a total of 52 spaces or 4.33 space/unit.
- The site plan was amended from the initial proposal to move the buildings an additional 10 feet to the east. In addition to now providing a 62-foot building setback from the west, the landscaping plan for the west side of the development will include maple trees, arbor vitae, and crab apple plantings. Additionally, there

are several existing trees on the property line, which will be maintained.

- The proposed landscaping for the eastern building will also attempt to maintain many of the mature existing trees along that property line. There will also be parkway trees installed in the right of way and additional internal landscaped areas through the development.
- The proposed gross density is 6.09 units per acre. The chart below compares the densities of this project with the two adjoining townhouse projects:

	Units	***Acres***	***Gross Density***	***Net Density***
Garden Subdivision	12 units	1.97	6.09 units/acre	9.44 units/acre
Concord Mills #1 (east)	105 units	9.3	11.03 units/acre	
Lexington Chase	24 units	2.89	8.3 units/acre	12.58 units/acre
Newberry Lane	16 units	2.156	7.42 units/acres	10.21 units/acre
Bridgeview Creek West	41 units	4.994	8.23 units/acre	9.97 units/acre

Architecture

- In response to the questions raised at both the initial Public Hearing and the neighborhood meeting, the Petitioner revised the architectural plans with the following modifications:
    - Additional brick façade elements throughout the front and rear “walk-out” elevations and modified gable ends;
    - These plans also include additional details including a dormer window on the middle units to further break up the roof lines accordingly; and
    - The ridge lines for the roofs were also reduced to 20 feet (from 22 feet).

- The architecture is an improvement from the initial submission.

Engineering

- The existing grade generally flows from southeast to the northwest corner of the proposed development. In its existing condition, there is an approximately 13-foot grade differential on this site (772 SE to 759 NW).

- Storm water would be collected through the installation of two new sections of storm sewer (east to west), accessed through inlets on the north and middle section of the development. The storm water is then collected and transferred to

a detention basin on the northwest side of the property, discharged through a restrictor and into a new storm sewer system. This system will be extended by the developer in support of the proposal.

- In addition to addressing all of the Village Engineer's conditions in the initial submittal, the Engineering Plans were further revised to include the following changes:
    - The detention area on the north and west side of the property was expanded to allow for additional storage. This also allowed for the elimination of the underground storage.
- Presently, there are no storm sewers in this subdivision. Therefore, storm water follows the grade in a free flowing manner. In addition to capturing the storm water on the proposed development and conveying it through a restrictor, the proposed storm sewer crosses Garden Avenue south and then turn west to Elm Street. It then would transition south along the east side Elm Street until it connects to an existing Village storm sewer along Home Avenue.
    - There are a number of storm water inlets added to the ROW to allow and accept additional storm water run-off to be conveyed through the new storm sewer extension. Ultimately, this will be a benefit to the subdivision and neighborhood.
- The storm sewer along Elm Street will also use the existing ditch and any needed driveway culverts, in addition to the storm sewer to accept the storm water. The final engineering plans modify and extend the existing line to further assist with the conveyance of storm water in the area.
- The sanitary sewer would be extended along the north side of Garden Avenue, then north along Elm Street to connect to an existing sanitary sewer system. The Village recently installed a water lines and the development would connect to the existing line running along the north side of Garden Avenue.

RECOMMENDATION:

The current Village adopted Comprehensive Plan recognized that the future best use of these 3 lots should consider an office use, in addition to the previous recommendation for commercial land uses. The subject proposal provides a land use transition for the commercial properties and incorporates a moderate density. Also, the Petitioner made several architectural improvements and the storm sewer extensions will assist in managing storm water, in a subdivision that is presently devoid of any storm sewers. Therefore, Staff recommends approval of the Preliminary Planned Development subject

to the following conditions:

1) The final architecture, engineering, and site development plans shall substantially conform to the Spies and Associates Preliminary Engineering Plans, dated 01/25/2018 and the Mathias Jans Architect plans, dated 05/07/2018, except as such plans may be changed to conform to Village Codes and Ordinances.

2) The Final Engineering Plans shall be revised in a manner acceptable to the Village Engineer, and include the following:

    a. MWRD, WMO, and IEPA permits would be required. Site runoff, volume control and detention requirements apply.

    b. The retaining wall design will need to have the appropriate structural engineering review and seal for Village review.

    c. The driveway access cuts on Hicks Road shall be removed and replaced with barrier curb.

    d. The project engineer shall provide the necessary plan information to demonstrate sufficient overflow capacity for the proposed lookout units. This should include 1.3 feet of freeboard, if directed by the Village Engineer.

    e. The water main shall be extended east of unit 7 to the easement for the future connection to the Village's water main to complete the loop.

3) After the construction of the second building, the Petitioner's engineer shall submit updated impervious coverage calculations in a manner acceptable to the Village Engineer. This shall include any Village recommend changes to the impervious calculations and engineering plans for the development.

4) Prior to the issuance of a building permit for any building, the developer shall complete the detention basin installation and storm sewer extensions along Garden Avenue, south along Elm Street, including the required ditch line in the Elm Street and Garden Avenue ROW, with approval from the Village Engineer.

5) A construction management and traffic plan shall be submitted in a manner acceptable to the Directors of Public Works and Planning and Zoning. This traffic management plan shall outline the proposed development schedule and identify the material delivery routes and proposed parking areas for the contractors, prior to the completion of internal drive. The construction traffic and material deliveries should be directed to and from Hicks Road for access to the site. A component of this plan shall also include an initial notification, by standard mail, to the residential properties within 600 feet of the subject property, once the initial site development schedule is known.

6) As part of the implementation of the Final Planned Development, the Traffic Committee may review and recommend additional parking and traffic controls to

the Village Council, including the parking adjustments/restrictions along Garden Avenue, proximate to the Subject Development.

7) Homeowners Declarations shall be submitted in a manner acceptable to the Village Attorney and Director of Planning and Zoning, and shall address the following items:

   a. The internal road shall remain private and the Village will not be responsible for maintenance or snow removal. A snow removal and maintenance plan shall be submitted in a manner acceptable to the Director of Planning and Zoning and the Director of Fire Prevention.

   b. The private maintenance responsibilities of the HOA for the detention basin and any appropriate plantings within the detention basin.

8) A Planned Development letter of credit in the amount of $120,000 shall be submitted in manner acceptable to the Village of Palatine.

9) An engineer's estimate of probable cost shall be revised in a manner acceptable to the Village Engineer.

10) A letter of credit in the amount of 110% of the engineer's cost estimate for the public improvements shall be submitted.

11) Review fees in the amount of 1.5% of the engineer's cost estimate of the total project improvements shall be submitted.

12) Any building not constructed by the Petitioner shall receive approval from Village Council prior to the issuance of a building permit.

13) One side of the private road shall be posted "No Parking Fire Lane", including the hammerhead with an ordinance created to enforce this requirement. This request should be submitted through the Palatine Police Department.

14) A landscaping and screening plan shall be revised in a manner acceptable to the Director of Planning and Zoning.

ATTACHMENTS:

- Aerial Map
- ENG plans - 5115-COVER
- ENG plans - 5115-BOUNDARY
- ENG Plans - 5115-DETAILS 1
- ENG plans - 5115-DETAILS 2
- ENG plans - 5115-existing
- ENG plans - 5115-general notes 1
- ENG plans - 5115-GRADING

- ENG - 5115-PLAT OF SUB 1
- ENG plans - 5115-PLAT OF SUB 2
- ENG plans - 5115-PROFILES 1
- ENG plans - 5115-PROFILES 2
- ENG plans - 5115-PROFILES 3
- ENG plans - 5115-UTILITY PLAN
- ENG narrative - Hicks Garden narrative (Petitioner submittal)
- ARCH plans -FLAT August. 03 2018 front elevation landscaping psd
- ARCH plans - Flat August. 03 2018 rear elevation landscaping psd
- ARCH plans - Master - townhouse -ABA MIX
- ARCH plans - HG Narrative
- Application
- Public Notice

1500 – 1548 N. Hicks Road – Preliminary Planned Development

PUBLIC IMPROVEMENT PLANS
FOR
GARDEN SUBDIVISION
PALATINE, IL
BY
SKAR DEVELOPMENT, LLC

STORM SEWER ROUTING
1"=300'

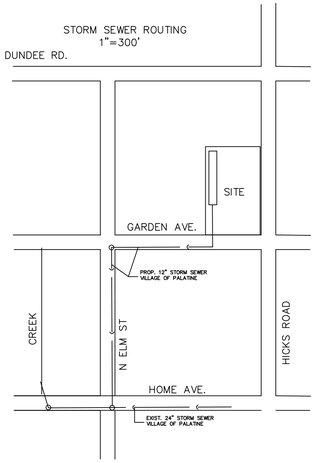

SANITARY SEWER ROUTING
1"=300'

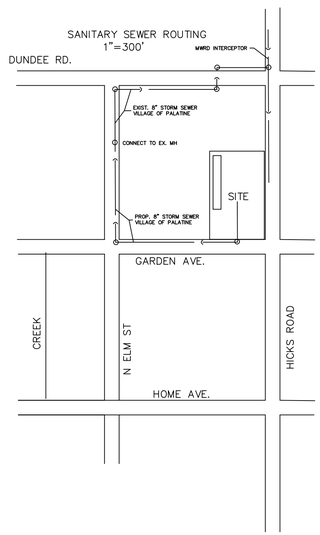

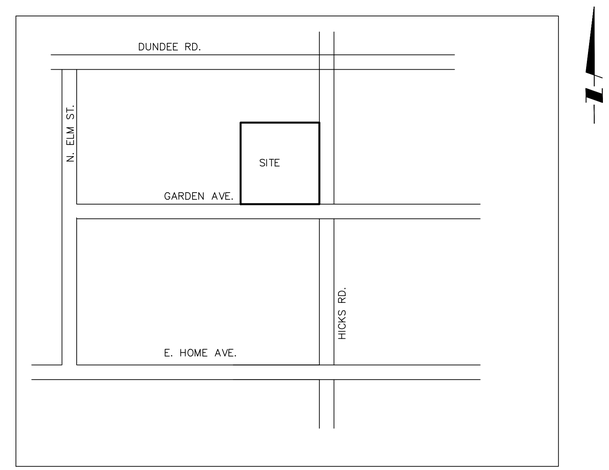

LOCATION MAP

LEGEND		
DESCRIPTION	EXISTING	PROPOSED
SANITARY SEWER		
STORM SEWER		
UNDERDRAIN		
WATERMAIN	W	W
GAS	G	G
IBT	I	I
CABLE	C	C
ELECTRIC	E	E
MANHOLE, INLET, CB FIRE HYDRANT, VALVE		
ELEVATIONS	(XXX.XX)	XXX.XX
TOP OF CURB EDGE OF PAVEMENT	XXX.XX XXX.XX	XXX.XX XXX.XX
GEOMETRIC COORDINATE	(XXXX)	(XXXX)
LIGHT POLES		
DRAINAGE ARROWS		
SEWER CLEANOUT		
WATER METER VAULT	M	M
UTILITY POLE		
SOIL BORINGS	N/A	B–
TRAFFIC SIGN		
TRAFFIC ARROW		
PARKING STALL COUNT		
TREE		
RELOCATE TREE		
ITEM REMOVAL		N/A
PAVEMENT REMOVAL		N/A
P.C.C		
MARSH		N/A

ALL DIMENSIONS AND COORDINATES ARE REFERENCED TO THE EDGE OF PAVEMENT UNLESS INDICATED OTHERWISE
OPEN SYMBOLS AND DASHED LINES INDICATE EXISTING IMPROVEMENTS

INDEX OF SHEETS

1. COVER SHEET
2. GENERAL NOTES
3. MWRD GENERAL NOTES
4. EXISTING CONDITIONS
5. GRADING/EROSION CONTROL PLAN
6. DEVELOPMENT SITE PLAN
7. SITE PROFILE PLAN
8. GARDEN AVE PROFILE
9. ELM STREET PROFILE
10. ELM STREET PROFILE
11. DETAILS
12. DETAILS

BENCHMARK
MWRD INTERCEPTOR MANHOLE IN THE NORTHWEST CORNER OF THE PAVEMENT AT THE INTERSECTION OF HICKS ROAD AND GARDEN STREET.
NGVD29 ELEVATION 769.42
TO OBTAIN NAVD88 DATUM SUBTRACT 0.284'

EXISTING UTILITIES
WHEN THE PLANS OR SPECIAL PROVISIONS INCLUDE INFORMATION PERTAINING TO THE LOCATION OF UNDERGROUND UTILITY FACILITIES, SUCH INFORMATION REPRESENTS ONLY THE OPINION OF THE ENGINEER AS TO THE LOCATION OF SUCH UTILITIES AND IS ONLY INCLUDED FOR THE CONVENIENCE OF THE BIDDER. THE ENGINEER AND THE OWNER ASSUME NO RESPONSIBILITY WHATSOEVER IN RESPECT TO THE SUFFICIENCY OR VERACITY OF THE INFORMATION SHOWN ON THE PLANS RELATIVE TO THE LOCATION OF UNDERGROUND UTILITY FACILITIES OR THE MANNER IN WHICH THEY ARE TO BE REMOVED OR ADJUSTED. IT SHALL BE THE CONTRACTORS RESPONSIBILITY TO DETERMINE THE ACTUAL LOCATION OF ALL SUCH FACILITIES. HE SHALL ALSO OBTAIN FROM THE RESPECTIVE UTILITY COMPANIES DETAILED INFORMATION RELATIVE TO THE LOCATION OF THEIR FACILITIES AND THE WORKING SCHEDULES OF THE UTILITY COMPANIES FOR REMOVING OR ADJUSTING THEM.

DRAINAGE STATEMENT
TO THE BEST OF OUR KNOWLEDGE AND BELIEF, THE DRAINAGE OF SURFACE WATERS WILL NOT BE CHANGED BY THE CONSTRUCTION OF THIS SUBDIVISION OR ANY PART THEREOF, OR, THAT IF DRAINAGE WILL BE CHANGED, REASONABLE PROVISION HAS BEEN MADE FOR THE COLLECTION AND DIVERSION OF SUCH SURFACE WATERS INTO THE PUBLIC AREAS, OR DRAINS APPROVED FOR THE USE BY THE MUNICIPAL ENGINEER, AND THAT SUCH SURFACE WATERS ARE PLANNED FOR IN ACCORDANCE WITH GENERALLY ACCEPTED ENGINEERING PRACTICES SO AS TO REDUCE THE LIKELIHOOD OF DAMAGE TO THE ADJOINING PROPERTY BECAUSE OF THE CONSTRUCTION OF THIS SUBDIVISION.

REGISTERED PROFESSIONAL ENGINEER 62-42874

PREPARED FOR:
SKAR DEVELOPMENT, LLC
21 N. BROCKWAY ST., STE 201
PALATINE, IL

TIMOTHY J. SPIES
62-42874
REGISTERED PROFESSIONAL ENGINEER OF ILLINOIS

CALL JULIE TOLL FREE
1(800)892-0123
OPERATES 24 HOURS A DAY 365 DAYS A YEAR
WARNING
CALL BEFORE YOU DIG
CALL
1(800)892-0123
48 HOURS BEFORE YOU DIG

SPIES & ASSOCIATES, INC.
Civil Engineers – Land Surveyors
534 WEST CAMPUS DRIVE
ARLINGTON HEIGHTS, ILLINOIS 60004
PH 847.577.8808 FAX 847.577.0229

REVISIONS
PER VILLAGE 08-01-18

DRAWN BY:	L.T.S.	JOB NO.	5115
DESIGNED BY:	TJS		
CHECKED BY:	T.J.S.	DATE:	06-25-18

PUBLIC IMPROVEMENT PLANS
COVER SHEET & LOCATION MAP

SHEET NO.
1
OF 12 SHEETS

Attachment: ENG plans - 5115-COVER (1500, 1532, and 1548 N. Hicks Road - Preliminary & Final Planned Development)

ALTA SURVEY

MORRISON SURVEYING CO., INC.

2710 N IL Rt 47, Morris, Illinois 60450

LOTS 11, 12, AND 13 IN HOME GARDEN ACRES, BEING A SUBDIVISION OF THE NORTHEAST ¼ OF THE NORTHWEST ¼ OF SECTION 11, TOWNSHIP 42 NORTH, RANGE 10 EAST OF THE THIRD PRINCIPAL MERIDIAN, IN COOK COUNTY, ILLINOIS.

COMMONLY KNOWN AS 1500, 1532, AND 1548 N. HICKS ROAD, PALATINE, ILL.

N

SCALE 1"=30'

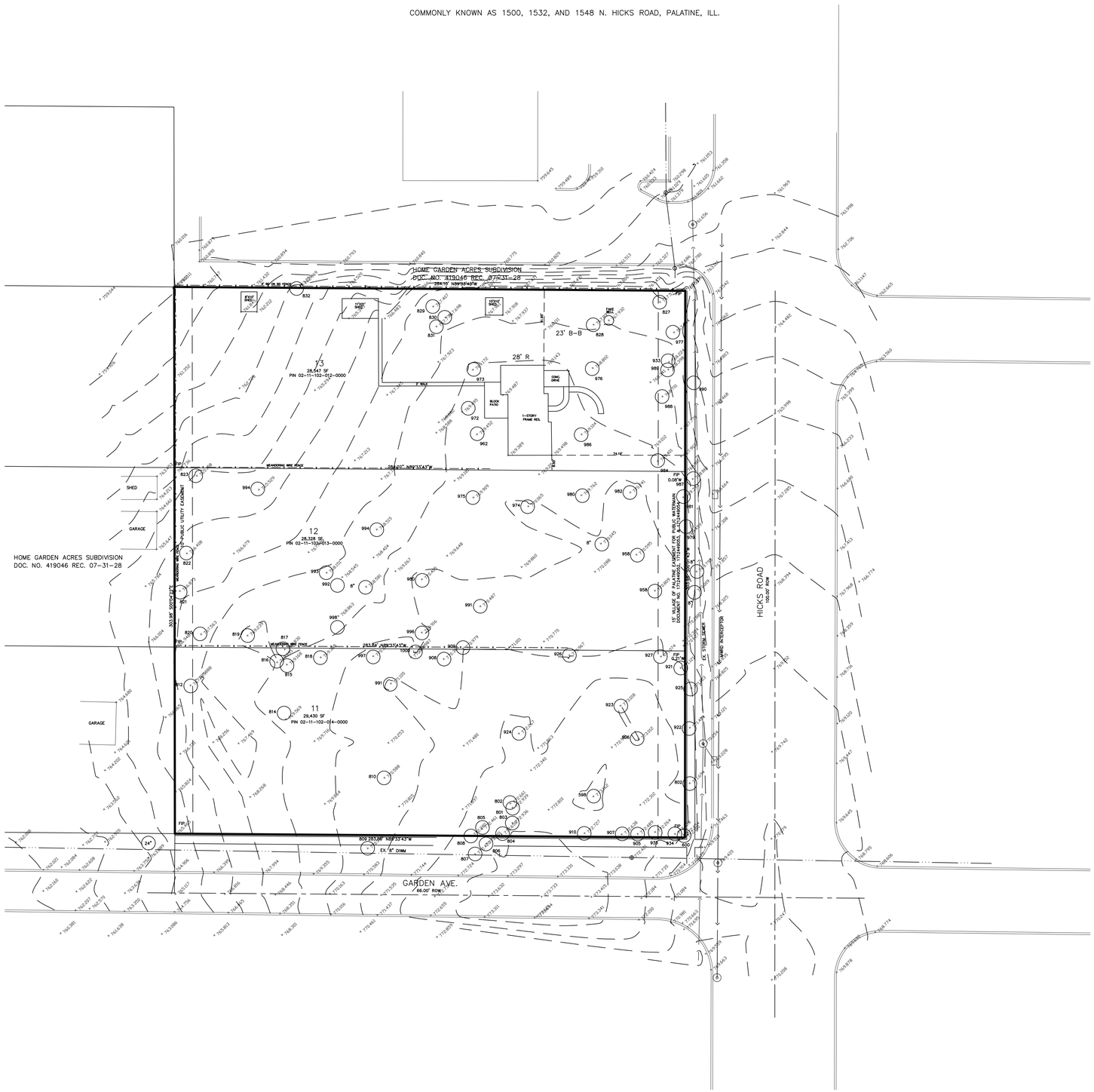

TABLE A REQUIREMENTS

1. MONUMENTS ARE SHOWN HEREON
2. THE AREAS ARE AS SHOWN
3. THE PROPERTY IS LOCATED IN ZONE X AS SHOWN ON FEMA FIRM 17031C0043F AS OF 11-06-2008.
4. THE AREAS ARE AS SHOWN.
5. VERTICAL RELIEF IS AS SHOWN.
6. THE PROPERTY IS ZONE R-1 IN THE VILLAGE OF PALATINE. THIS INCLUDES 20,000 SF MIN. LOT AREA. THE SETBACKS ARE 40 FOOT FRONT YARD, 50 FOOT REAR YARD AND 15 FOOT SIDE YARD.
8. SUBSTANTIAL FEATURES ARE AS SHOWN.
10. DOES NOT APPLY.
11. UTILITIES ARE AS SHOWN.
16. THERE IS NO EVIDENCE OF EARTH MOVING.
18. THERE IS NO EVIDENCE OF THE SITE BEING USED AS A SOLID WASTE DUMP, SUMP OR SANITARY LANDFILL.
19. OFFSITE IMPROVEMENTS ARE A SHOWN.

WE HAVE REVIEWED THE COMMITMENT FOR TITLE INSURANCE ISSUED BY CHICAGO TITLE INSURANCE COMPANY (COMMITMENT NO. 17018169NS) DATED OCTOBER 19, 2017. THE FOLLOWING ARE OUR COMMENTS REGARDING THE SCHEDULE B ITEMS:

1. NO COMMENT
2. IF ANY, AS SHOWN ON SURVEY.
3. IF ANY. AS SHOWN ON SURVEY.
4. NO COMMENT.
5. NO COMMENT.
6. NO COMMENT.
7. NO COMMENT.
8. NO COMMENT.
9. NO COMMENT.
10. NO COMMENT.
11. NO COMMENT.
12. NO COMMENT.
13. NO COMMENT.
14. NO COMMENT.
15. NO COMMENT.
16. NO COMMENT.
17. AS SHOWN.
18. NO COMMENT.
19. NO COMMENT.
20. NO COMMENT.
21. AS SHOWN.
22. AS SHOWN.
23. NO COMMENT.
24. NO COMMENT.
25. NO COMMENT.
26. NO COMMENT.
27. NO COMMENT.

MATTHEW JAMES MORRISON
35.3735
PROFESSIONAL LAND SURVEYOR
STATE OF ILLINOIS
MORRIS, IL

STATE OF ILLINOIS
S.S.
COUNTY OF GRUNDY

TO: SKAR DEVELOPMENT, LLC
CHICAGO TITLE INSURANCE COMPANY
MCHENRY SAVINGS BANK

WE, MORRISON SURVEYING CO., INC. (PDF LICENSE #184-003915) DO HEREBY CERTIFY THAT WE HAVE SURVEYED THE PROPERTY DESCRIBED IN THE CAPTION TO THE PLAT HEREON IN ACCORDANCE WITH THE 2011 MINIMUM STANDARD DETAIL REQUIREMENTS FOR ALTA/ASCM LAND TITLE SURVEYS, JOINTLY ESTABLISHED AND ADOPTED BY ALTA NSPS AND INCLUDES ITEMS 1, 3, 4, 5, 6(a), 6(b), 8, 10, 11(a), 16, 18, AND 20 OF TABLE A THEREOF.

FIELD WAS COMPLETED DECEMBER 22, 2017

DATE OF PLAT OR MAP DECEMBER 26, 2015

MATTHEW JAMES MORRISON ILPS NO. 35-3735 EXP 11-30-18

1. COMPARE ALL SURVEY POINTS WITH ONE ANOTHER BEFORE BUILDING BY SAME, AND REPORT ANY DISCREPANCIES IMMEDIATELY.
2. CHECK LEGAL DESCRIPTION WITH DEED AND REPORT ANY DISCREPANCIES IMMEDIATELY.
3. BUILDING LINES, IF ANY, SHOWN HEREON ARE AS SHOWN ON THE RECORDED SUBDIVISION.
4. NO DISTANCES OR ANGLES SHOWN HEREON MAY BE ASSUMED BY SCALING.

SPIES & ASSOCIATES, INC.
Civil Engineers – Land Surveyors
534 WEST CAMPUS DRIVE
ARLINGTON HEIGHTS, ILLINOIS 60004
PH 847.577.8808 FAX 847.577.0229

FILE No.: 5115

Attachment: ENG plans - 5115-BOUNDARY (1500, 1532, and 1548 N. Hicks Road - Preliminary & Final Planned Development)

STABILIZED CONSTRUCTION ENTRANCE PLAN

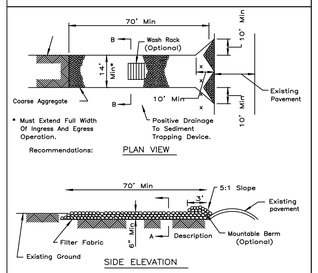

NOTES:
1. Filter fabric shall meet the requirements of material specification 592 GEOTEXTILE, Table I or 2, Class , I or Wnd shall be placed over the cleared area prior to the placing of rock.
2. Rock or reclaimed concrete shall meet one of the following IDOT coarse aggregate gradation, CA-1, CA-2, CA-3 or CA-4 and be placed according to construction specification 25 ROCKFILL using placement Method 1 and Class III compaction.
3. Any drainage facilities required because of washing shall be constructed according to manufacturers specifications.
4. If wash racks are used they shall be installed according to the manufacturers specifications.

REFERENCE			U.S. DEPARTMENT OF AGRICULTURE SOIL CONSERVATION SERVICE ILLINOIS	STANDARD DWG. NO. IL-630
Project				SHEET 1 OF 2
Designed		Date		DATE 8-18-94
Checked		Date		
Approved		Date		

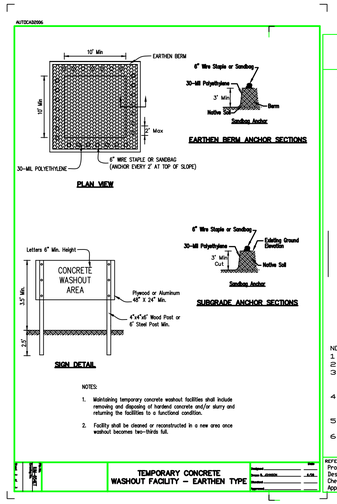

NOTES:
1. Maintaining temporary concrete washout facilities shall include removing and disposing of hardened concrete and/or slurry and returning the facilities to a functional condition.
2. Facility shall be cleaned or reconstructed in a new area once washout becomes two-thirds full.

REV	DATE	DESCRIPTION	BY
1	7-1-96	REVISED NOTES	JLM
2	8-1-96	REVISED NOTES	JLM

TEMPORARY CONCRETE WASHOUT FACILITY – EARTHEN TYPE

SILT FENCE PLAN

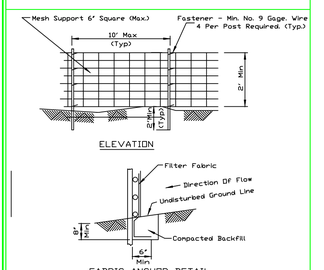

NOTES:
1. Top and bottom wires of mesh support shall be min. gage no.9.
2. Intermediate wires of mesh supports shall be min. gage no. 11.
3. Temporary sediment fence shall be installed prior to any grading work in the area to be protected. They shall be maintained throughout the construction period and removed in conjunction with the final grading.
4. Filter fabric shall meet the requirements of material specification 592 Geotextile Table I or 2, Class I with equivalent opening size of at least 30 for nonwoven and 50 for woven.
5. Fence post shall be either standard steel post or wood post with a minimum sectional area 3.0 sqin.
6. The mesh support may be omitted if a maximum of 5' is used for post post spacing.

REFERENCE			U.S. DEPARTMENT OF AGRICULTURE SOIL CONSERVATION SERVICE ILLINOIS	STANDARD DWG. NO. IL-620
Project				SHEET 1 OF 1
Designed		Date		DATE 3-3-95
Checked		Date		
Approved		Date		

EROSION CONTROL BLANKET - TURF REINFORCEMENT MAT (TRM)

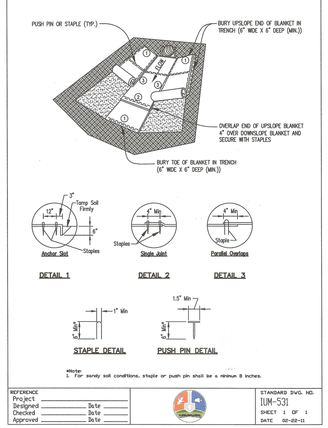

NOTES:
1. For sandy soil conditions, staples or push pin shall be a minimum 8 inches.

REFERENCE			STANDARD DWG. NO. IUM-531
Project			SHEET 1 OF 1
Designed		Date	DATE 06-20-11
Checked		Date	
Approved		Date	

TRADITIONAIRE 100W HPS CONC. BASE STREET LIGHTING DETAIL

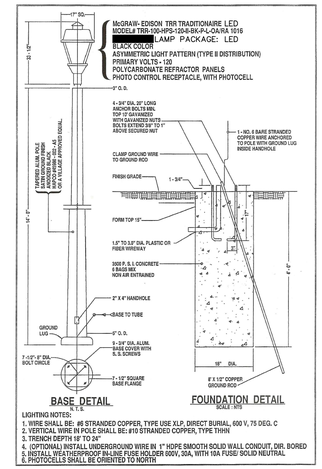

LIGHTING NOTES:
1. WIRE SHALL BE: #6 STRANDED COPPER, TYPE USE XLP, DIRECT BURIAL, 600 V, 75 DEG. C
2. VERTICAL WIRE IN POLE SHALL BE: #10 STRANDED COPPER, TYPE THHN
3. TRENCH DEPTH 18" TO 24"
4. (OPTIONAL) INSTALL UNDERGROUND WIRE IN 1" HDPE SMOOTH SOLID WALL CONDUIT, DIR. BORED
5. INSTALL WEATHERPROOF IN-LINE FUSE HOLDER (600V, 30A, WITH 10A FUSE) SOLID NEUTRAL
6. PHOTOCELLS SHALL BE ORIENTED TO NORTH

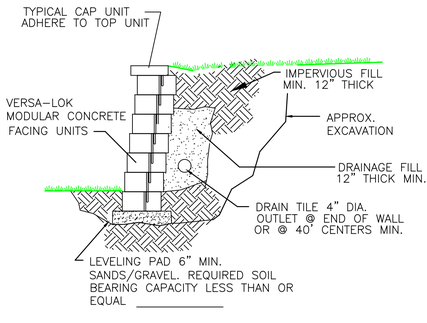

TYPICAL SECTION–UNREINFORCED
MODULAR CONCRETE UNIT RETAINING WALL
SCALE: NONE

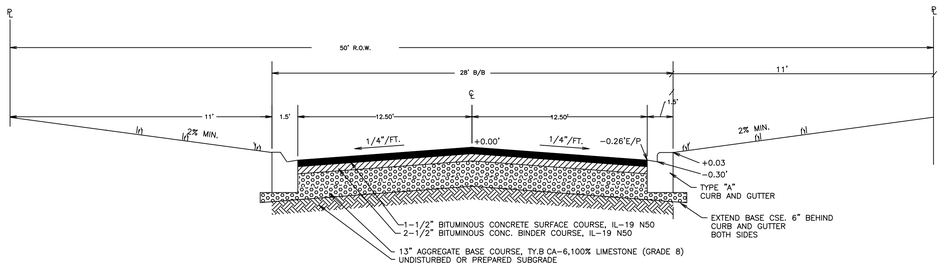

TYPICAL PAVEMENT CROSS SECTION 50' ROW

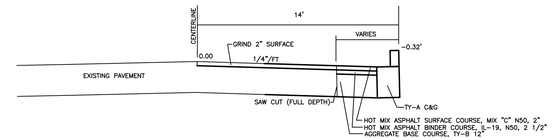

PAVEMENT WIDENING GARDEN AVE. (SECTION A-A)

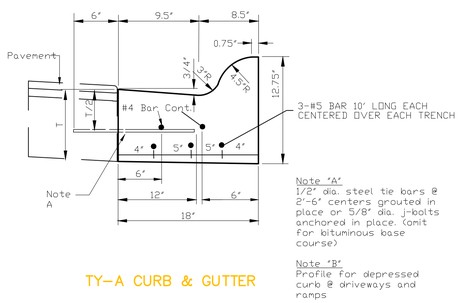

Note 'A'
1/2" dia. steel tie bars @ 2'-6" centers grouted in place or 5/8" dia. j-bolts anchored in place (omit for bituminous base course)

Note 'B'
Profile for depressed curb @ driveways and ramps

TY-A CURB & GUTTER

Notes:
1. 2-#4 longitudinal bars 20 feet in length with 12" overlaps, at 60' intervals, except at expansion joints.
2. Expansion joints shall be a minimum of 3/4" preformed expansion material and shall be provided with a 1" dia. x 18" coated smooth dowel bar fitted with a cap that will allow a minimum of 1" of expansion.
3. Construction joints shall be template formed or saw-cut (within 24 hours of placement of the curb) to 1/5th the depth of the gutter flag at 20ft. intervals or at the joints depth of the gutter flag at 20ft. intervals or at the joints in an adjacent concrete pavement.

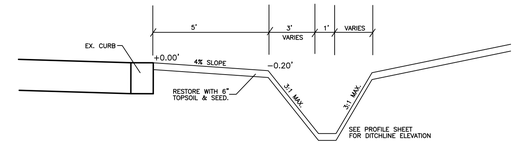

PROPOSED DITCHLINE (ELM ST. & GARDEN AVE)

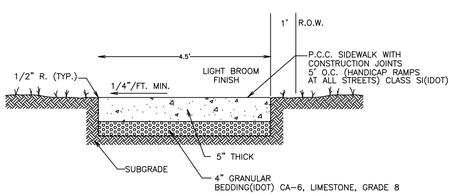

CONCRETE SIDEWALK SECTION
N.T.S.

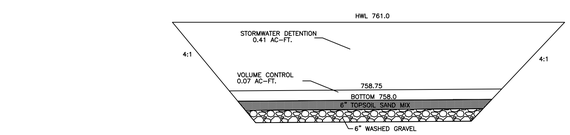

DETENTION BASIN CROSS SECTION

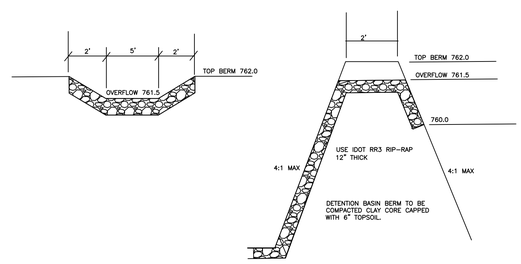

DETENTION BASIN OVERFLOW

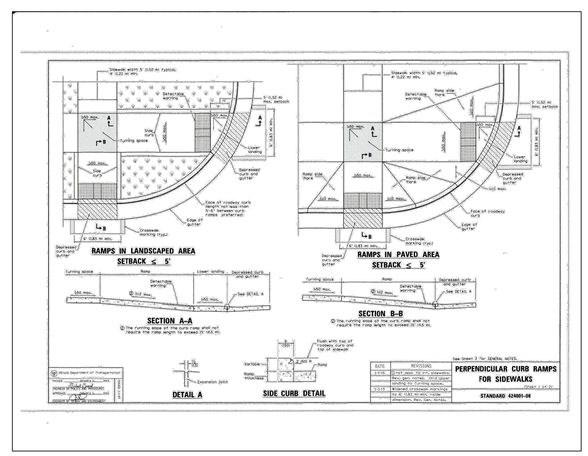

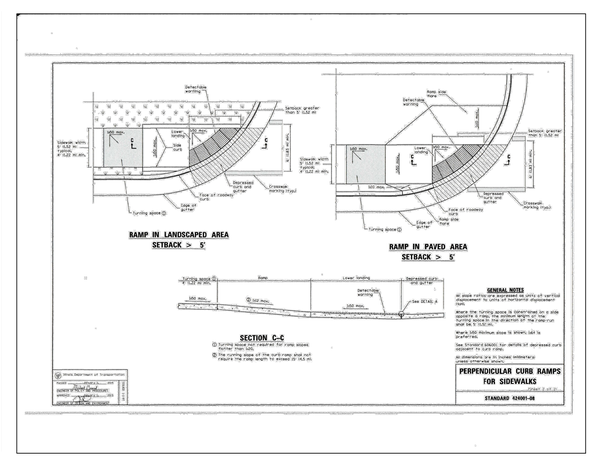

SPIES & ASSOCIATES, INC.
Civil Engineers – Land Surveyors
534 WEST CAMPUS DRIVE
ARLINGTON HEIGHTS, ILLINOIS 60004
PH 847.577.8808 FAX 847.577.0229

REVISIONS
PER VILLAGE 08-01-18

DRAWN BY:	TJS	JOB NO.	5115
DESIGNED BY:	TJS	SCALE:	
CHECKED BY:	TJS	DATE:	06-25-19

DETAIL SHEET
GARDEN SUBDIVISION

SHEET NO. 11 OF 12 SHEETS

Attachment: ENG Plans - 5115-DETAILS 1 (1500, 1532, and 1548 N. Hicks Road - Preliminary & Final Planned Development)

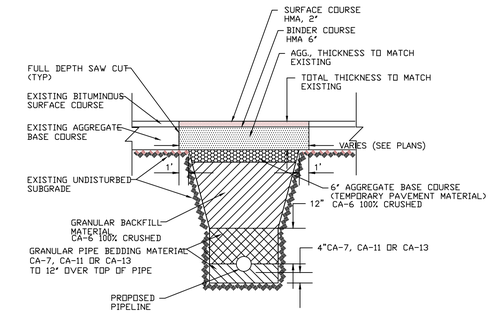

PAVEMENT TRENCH DETAIL
NTS

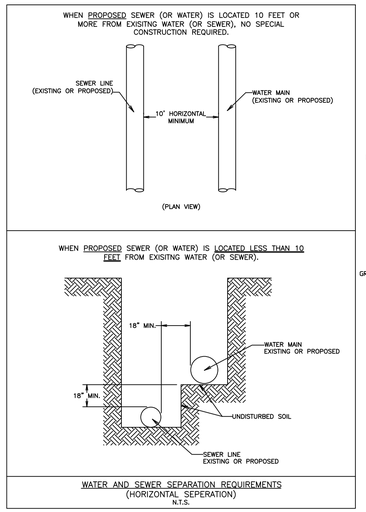

WATER AND SEWER SEPARATION REQUIREMENTS
(HORIZONTAL SEPERATION)
N.T.S.

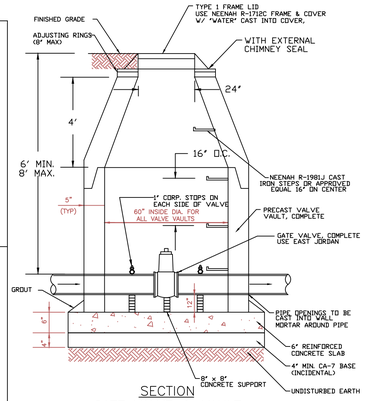

SECTION
GATE VALVE & VAULT
N.T.S.

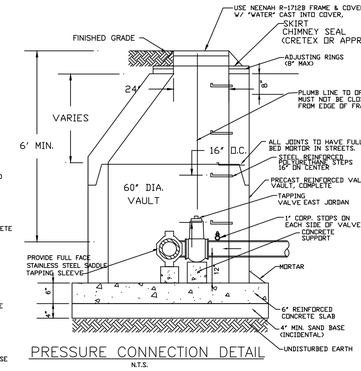

PRESSURE CONNECTION DETAIL
N.T.S.

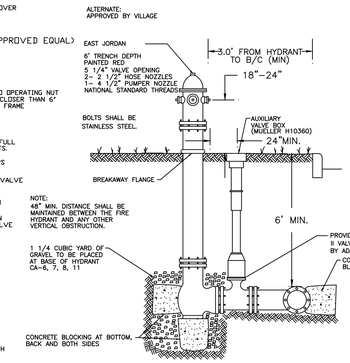

FIRE HYDRANT ASSEMBLY
N.T.S.

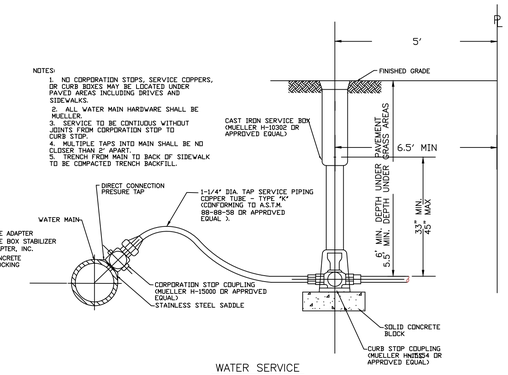

WATER SERVICE

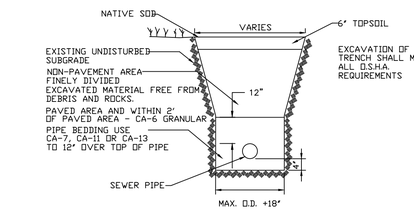

SEWER PIPE BEDDING DETAIL
N.T.S.

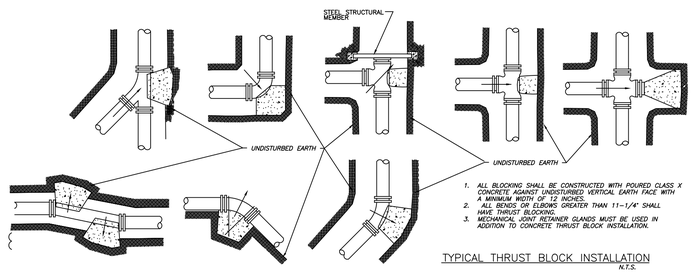

TYPICAL THRUST BLOCK INSTALLATION
N.T.S.

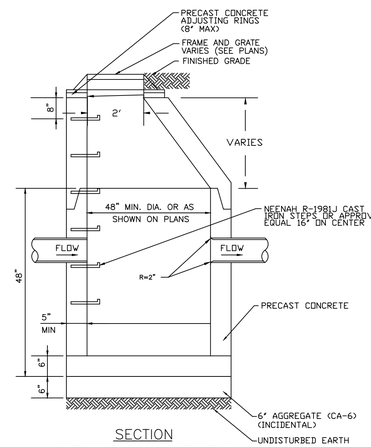

SECTION
CATCH BASIN - TYPE A
N.T.S.

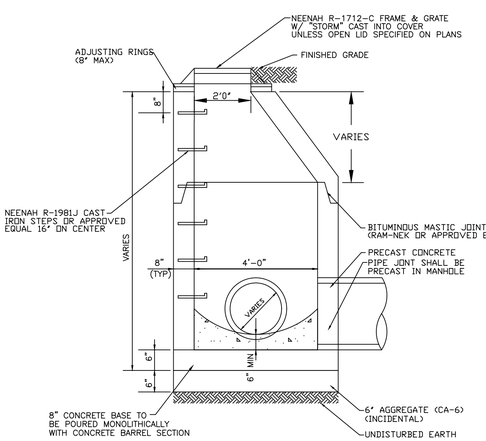

STORM MANHOLE - TYPE A
N.T.S.

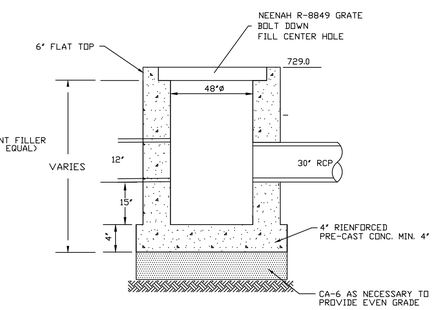

OVERFLOW STRUCTURE
CB 129

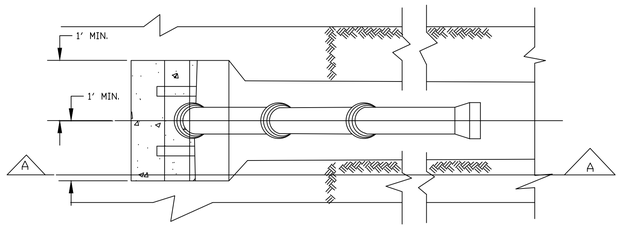

PLAN

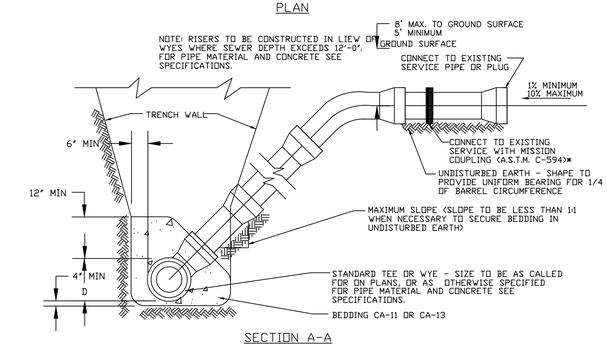

SECTION A-A
SANITARY SERVICE RISER
N.T.S.

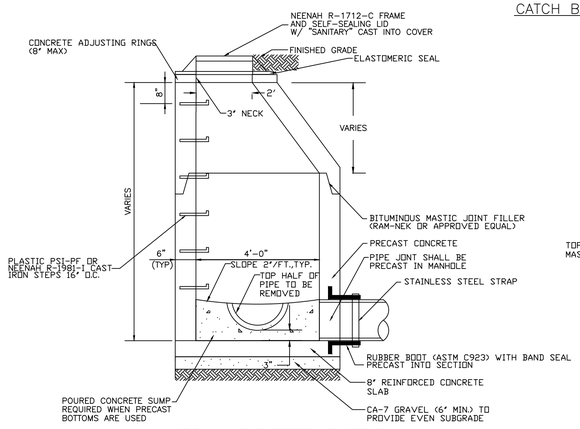

SANITARY MANHOLE DETAIL
N.T.S.

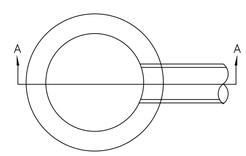

PLAN

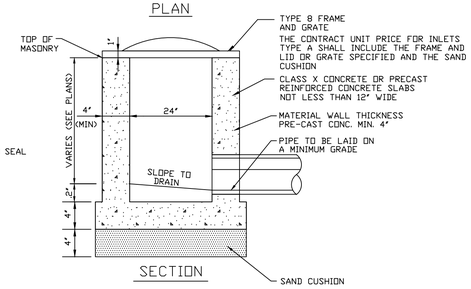

SECTION
TYPE "A" INLET
NTS

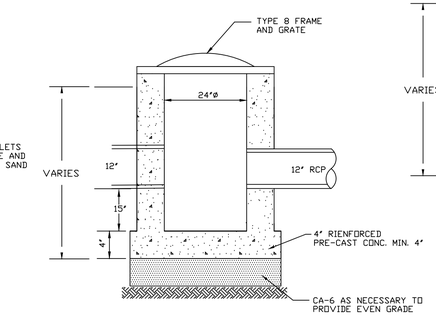

RESTRICTED DEPTH CATCHBASIN (RDCB)

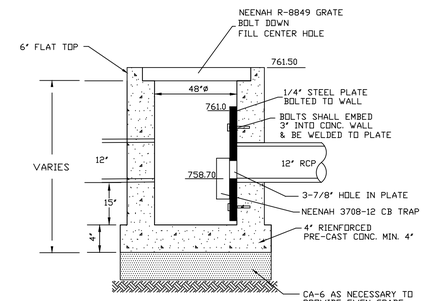

OUTLET CONTROL STRUCTURE

SPIES & ASSOCIATES, INC.
Civil Engineers - Land Surveyors
534 WEST CAMPUS DRIVE
ARLINGTON HEIGHTS, ILLINOIS 60004
PH 847.577.8808 FAX 847.577.0229

REVISIONS

DRAWN BY: TJS	JOB NO. 5115
DESIGNED BY: TJS	SCALE:
CHECKED BY: TJS	DATE: 06-25-18

DETAIL SHEET
GARDEN SUBDIVISION

SHEET NO. 12 OF 12 SHEETS

Attachment: ENG plans - 5115-DETAILS 2 (1500, 1532, and 1548 N. Hicks Road - Preliminary & Final Planned Development)

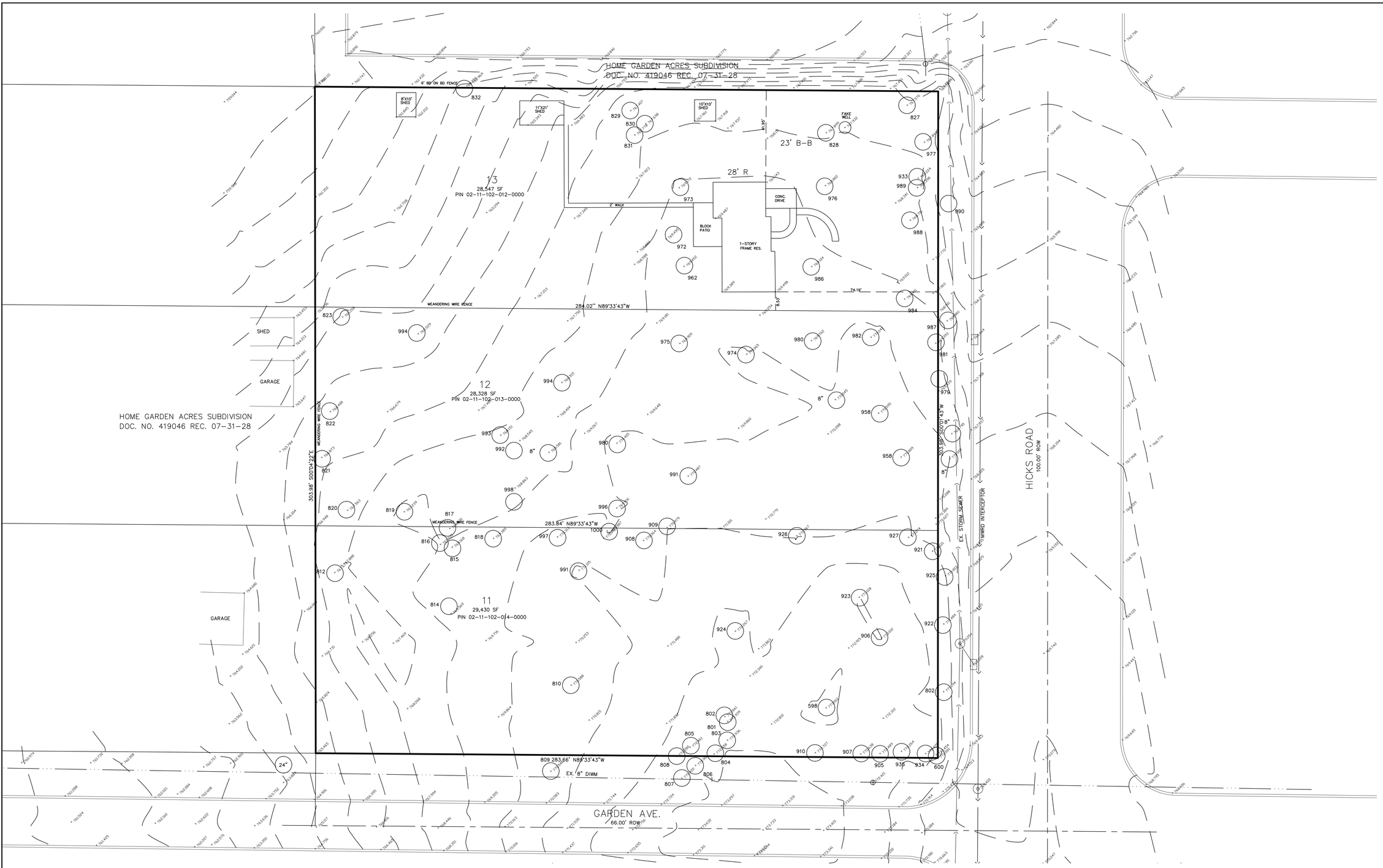

TREE LISTING

TAG #	SIZE IN.
598	48
600	18
801	8
802	10
803	6
804	12
805	6
806	24
807	24
808	8
809	24
810	10
812	6
814	15
815	8
816	12
817	12
818	24
818	60
820	8
821	48
822	60
823	60
826	24
827	24
828	18
829	18
830	15
831	12
832	18
905	18
906	48
907	15
908	2-12
909	2-30
910	18
921	24
922	24
923	12
924	24
925	24
926	15
927	5-12
933	12
934	18
935	10
958	30
962	24
972	24
973	18
974	48
975	30
976	24
977	24
979	15
980	24
981	15
982	30
984	12
985	48
986	18
987	12
988	10
989	15
990	12
991	15
992	18
993	18
994	24
995	60
997	24
998	12
1000	2-10

ALL EXISTING SEPTIC SYSTEMS SHALL BE ABANDONED.
ABANDONED TANKS SHALL BE FILLED WITH GRANULAR MATERIAL.

WHEN DISCONNECTION FROM A SEPTIC SYSTEM AND SANITARY SERVICE CONNECTION IS MADE THE EXISTING SEPTIC SYSTEM MUST BE ABANDONED BY PUMPING OUT ANY RESIDUAL SLUDGE, COMPLETEL;Y FILLING THE ABANDONED SEPTIC TANKS WITH GRANULAR MATERIAL SUCH AS IDOT FA 2 OR CA 6, AND PLUGGING THE ENDS WITH GROUT. ALTERNATIVELY, THE SEPTIC SYSTEM COULD BE COMPLETELY REMOVED. IF THE EXISTING SEPTIC TANK IS LEFT IN PLACE, THE BOTTOM SLAB SHOULD BE PUNCTURED TO ALLOW WATER TO DRAIN OUT, AND THE ENDS PLUGGED WITH GROUT.

SPIES & ASSOCIATES, INC.
Civil Engineers – Land Surveyors
534 WEST CAMPUS DRIVE
ARLINGTON HEIGHTS, ILLINOIS 60004
PH 847.577.8808 FAX 847.577.0229

REVISIONS

DRAWN BY: TJS	JOB NO. 5115
DESIGNED BY: TJS	SCALE: 1"=20'
CHECKED BY: TJS	DATE: 06-25-18

EXISTING CONDITIONS GARDEN SUBDIVISIOM

SHEET NO. 4 OF 12 SHEETS

Attachment: ENG plans - 5115-existing (1500, 1532, and 1548 N. Hicks Road - Preliminary & Final Planned Development)

GENERAL NOTES AND CONDITIONS

1. ALL EARTHWORK, GRADING AND PAVING SHALL BE PERFORMED IN ACCORDANCE WITH STANDARD SPECIFICATIONS FOR ROAD AND BRIDGE CONSTRUCTION IN ILLINOIS, STATE OF ILLINOIS DEPARTMENT OF TRANSPORTATION, CURRENT EDITION, AND ALL REVISIONS AND SUPPLEMENTS THERETO, AND THE REQUIREMENTS AND SPECIFICATIONS OF THE VILLAGE OF PALATINE.

2. ALL SANITARY SEWER, WATER MAIN, AND STORM SEWER SHALL BE CONSTRUCTED IN ACCORDANCE WITH STANDARD SPECIFICATIONS FOR WATER AND SEWER MAIN CONSTRUCTION IN ILLINOIS, CURRENT EDITION, AND ALL REVISIONS AND SUPPLEMENTS THERETO, AND THE PUBLISHED STANDARD SPECIFICATIONS AND REQUIREMENTS OF THE VILLAGE OF PALATINE. THE CONTRACTOR IS RESPONSIBLE FOR FAMILIARIZING HIMSELF WITH THE VILLAGE OF PALATINE. REQUIREMENTS.

3. THE REQUIREMENTS AND SPECIFICATIONS OF THE VILLAGE OF PALATINE SUBDIVISION CONTROL ORDINANCE SHALL GOVERN OVER ALL.

4. THE VILLAGE OF PALATINE ENGINEERING DEPARTMENT MUST BE NOTIFIED AT LEAST TWO (2) WORKING DAYS PRIOR TO THE REQUEST FOR INSPECTION, COMMENCEMENT OR RESUMPTION OF ANY WORK.

5. THE CONTRACTOR SHALL KEEP CAREFUL MEASUREMENTS AND RECORDS OF ALL CONSTRUCTION AND SHALL FURNISH THE ENGINEER AND THE VILLAGE WITH RECORD DRAWINGS UPON COMPLETION OF HIS WORK. SET OF MYLAR-REPRODUCIBLE RECORD DRAWINGS AND COPIES MUST BE FURNISHED TO THE VILLAGE BY THE DEVELOPER.

THE CONTRACTOR SHALL ACCURATELY MARK THE LOCATION OF EACH SANITARY SERVICE, STORM SERVICE AND WATER SERVICE CONNECTION BY PLACING A 4" X 4" POST EIGHT FEET LONG AT THE END OF EACH SERVICE CONNECTION. EACH POST SHALL BE SET SO IT IS PLUMB AND THE TOP END IS THIRTY SIX (36) INCES ABOVE GRADE. THE TOP EIGHTEEN (18) INCES OF EACH POST SHALL BE NEATLY PAINTED TO INDICATE WHICH SERVICE IS BEING MARKED. RED INDICATES SANITARY, GREEN INDICATES STORM AND BLUE INDICATES WATER. POSTS WHICH ARE DESTROYED, BROKEN OR PULLED OUT SHALL BE REPLACED BY THE CONTRACTOR.

THE CONTRACTOR SHALL PROVIDE THE ENGINEER WITH A TABULAR LISTING OF EACH AND EVERY SERVICE CONNECTION AND THIER LOCATIONS RELATIVE TO PERMANENT FIXED OBJECTS SUCH AS MANHOLES, PROPERTY CORNERS, ETC. EACH "B"-BOX SHALL BE ACCURATELY LOCATED BY A SERIES OF THREE PRECISE INTERSECTING LOCATION MEASURMENTS. THE DEPTH AS MEASURED FROM FINISHED GRADE SHALL ALSO BE RECORDED. FINALLY, THE LOCATION OF ALL WYES AND SERVICE LINE TAPE SHALL BE ACCURATLY RECORDED BY MEASURING THE DISTANCE TO THE NEAREST DOWNSTREAM STRUCTURE.

6. THE CONTRACTOR SHALL VERIFY THE LOCATION OF ALL UTILITIES IN THE FIELD PRIOR TO CONSTRUCTION. THIS INCLUDES SANITARY SEWER, WATER MAIN, STORM SEWER, ILLINOIS BELL TELEPHONE, COMMONWEALTH EDISON, NORTHERN ILLINOIS GAS, AND CABLE TELEVISION IF ANY. THE JULIE NUMBER IS 1-800-892-0123.

7. ALL WORK PERFORMED BY THE CONTRACTOR SHALL BE GUARANTEED BY THE CONTRACTOR FOR A PERIOD OF TWELVE (12) MONTHS FROM THE DATE OF FINAL ACCEPTANCE. THIS GUARANTEE SHALL INCLUDE ALL DEFECTS IN MATERIALS AND WORKMANSHIP. THE DEVELOPER WILL BE RESPONSIBLE FOR MAINTENANCE FOR TWO (2) YEARS AFTER 80% OCCUPANCY IS REACHED.

8. ANY DIRT OR MATERIALS SHALL BE DISPOSED OF BY THE CONTRACTOR OFFSITE AT THE CONTRACTOR'S EXPENSE. THE DISPOSAL LOCATION MUST BE APPROVED BY THE VILLAGE IF WITHIN VILLAGE LIMITS.

9. ALL STRUCTURES, INLETS, PIPES, SWALES AND ROADS MUST BE KEPT CLEAN AND FREE OF DIRT AND DEBRIS AT ALL TIMES.

10. THE CONTRACTOR IS RESPONSIBLE FOR MAINTAINING ADEQUATE SIGNS, BARRICADES, FENCING, TRAFFIC CONTROL DEVICES AND MEASURES, AND ALL OTHER MEASURES THAT ARE NECESSARY TO PROTECT THE SAFETY OF THE SITE AT ALL TIMES. ALL SIGNS SHALL BE AS PER THE MANUAL OF TRAFFIC CONTROL DEVICES, CURRENT EDITION.

11. THE CONTRACTOR, BY AGREEING TO PERFORM THE WORK, AGREES TO INDEMNIFY AND HOLD HARMLESS THE OWNER, THE ENGINEER, THE VILLAGE AND ALL AGENTS AND ASSIGNS OF THOSE PARTIES, FROM ALL SUITS AND CLAIMS ARISING OUT OF THE PERFORMANCE OF SAID WORK, AND FURTHER AGREES TO DEFEND OR OTHERWISE PAY ALL LEGAL FEES ARISING OUT OF THE DEFENSE OF SAID PARTIES.

12. ALL ELEVATIONS ARE NGVD29 DATUM.

SOIL EROSION AND SEDIMENT CONTROL

1. REASONABLE CARE MUST BE TAKEN TO MINIMIZE SOIL EROSION. REFER TO THE STATE OF ILLINOIS "PROCEDURES AND STANDARDS FOR URBAN SOIL EROSION AND SEDIMENTATION CONTROL". THE U.S. SOIL CONSERVATION SERVICE IS ALSO AVAILABLE TO PROVIDE GUIDANCE.

2. ANY DISTURBED AREAS SHALL BE KEPT TO A PRACTICAL MINIMUM AND SHALL BE MULCHED, SEEDED, SODDED, OR PAVED WITHIN 7 CALENDAR DAYS FOLLOWING THE END OF ACTIVE DISTURBANCE.

3. ALL INLETS, STRUCTURES, PIPES, SWALES, AND ROADS SHALL BE KEPT CLEAN AND FREE OF DIRT AND SILT. STREETS ADJACENT TO THE SITE SHALL BE KEPT FREE OF DIRT, MUD AND OR DEBRIS BY SWEEPING.

4. STOCKPILES SHALL HAVE A BERM OR TRENCH AROUND THE CIRCUMFERENCE TO CONTROL SILT. STOCK PILES IN PLACE LONGER THAN 15 DAYS SHALL BE SEEDED. STOCKPILES SHALL ALSO HAVE A SILT FENCE PLACED AROUND.

5. STRAW BALES FIRMLY ANCHORED SHALL BE PLACED AROUND ALL INLETS, CATCHBASINS, SWALES, AND ADJACENT LANDS THAT RECEIVE SILTY RUNOFF DURING THE COURSE OF CONSTRUCTION. ALL STORM STRUCTURES SHALL HAVE FILTER FABRIC PLACED UNDER THE COVER AS ADDED PROTECTION. ADDITIONAL MEASURES AS DIRECTED BY THE VILLAGE ENGINEER.

6. ALL WETLANDS AND WATERCOURSE SHALL BE TOTALLY PROTECTED WITH SILT FENCE.

7. ADDITIONAL SOIL EROSION CONTROL MEASURES SHALL BE UNDERTAKEN DURING THE COURSE OF CONSTRUCTION, AS NEEDED.

8. MAINTAIN SOIL EROSION CONTROL DEVICES THROUGH THE DURATION OF THIS PROJECT.

9. REPLACE SOIL EROSION CONTROL DEVICES WITH SOD AND TOPSOIL AT THE COMPLETION OF THE PROJECT.

10. FOLLOWING PRELIMINARY EARTHWORK AND STORM SEWER CONSTRUCTION, SILT FENCE WILL BE PLACED AROUND THE RETENTION POND AND EITHER HAY BALES OR SILT FENCE WILL BE BE STAKED AROUND INLET STRUCTURES AS DIRECTED BY THE CITY ENGINEER.

11. PERENNIAL RYE GRASS SHALL BE SEEDED AND MAINTAINED IN AREAS WITH HIGH EROSION POTENTIAL.

STORM SEWER

1. ALL STORM SEWER SHALL BE CONSTRUCTED OF REINFORCED CONCRETE PIPE CLASS IV OR THICKER CONFORMING TO ASTM C-76, WITH PREFORMED JOINTS (ASTM C-433).

2. ALL INLETS, CATCHBASINS, AND MANHOLES SHALL BE PRECAST CONCRETE.

3. ALL STORM SEWERS UNDER AND WITHIN TWO FEET OF ANY EXISTING OR PROPOSED PAVEMENT OR SIDEWALK SHALL BE BACKFILLED WITH GRANULAR BACKFILL MATERIAL IDOT GRADATION CA-7 OR APPROVED EQUAL. (100% CRUSHED)

4. ANY FIELD TILES ENCOUNTERED SHALL BE RECONNECTED OR CONNECTED TO THE STORM SEWER SYSTEM. THE SIZE, LOCATION, AND DEPTH OF THE TILES SHALL BE RECORDED BY THE CONTRACTOR AND IMMEDIATELY REPORTED TO THE FIELD TILES TO BE SHOWN ON RECORD DRAWINGS.

5. FOOTING DRAINS SHALL DISCHARGE TO GRADE VIA SUMP PUMP DISCHARGE. VILLAGE OF PALATINE. LOCATION, SIZE & INVERT OF

6. ALL STORM SEWERS DISCHARGING ON THE GROUND SHALL BE INSTALLED WITH FLARED END SECTIONS AND TRASH/SAFETY GRATES.

WATER MAIN

1. ALL WATER MAIN SHALL BE CONSTRUCTED OF DUCTILE IRON PIPE CLASS 52 CONFORMING TO ANSI A-21.51 AND WITH JOINTS CONFORMING TO ANSI A-21.11. THE WATER MAIN SHALL BE CEMENT-LINED IN ACCORDANCE WITH ANSI A-21.4, BITUMINOUS COATED.

2. THE MINIMUM COVER FOR ALL WATER MAIN AND WATER SERVICE PIPE IS FIVE AND A HALF FEET (5'-6") FROM FINISHED GRADE TO TOP OF PIPE.

3. ALL WATER MAINS UNDER AND WITHIN TWO FEET OF ANY EXISTING OR PROPOSED PAVEMENT OR SIDEWALK SHALL BE BACKFILLED WITH GRANULAR BACKFILL MATERIAL IDOT GRADATION CA-7 OR APPROVED EQUAL. (100% CRUSHED)

4. ALL 6", 8",10" & 12" VALVES SHALL BE EAST JORDAN RESILIENT WEDGE VALVES AND BE FURNISHED MECHANICAL JOINTED, WITH CAST IRON BODY, BRONZE MOUNTED, BRONZE DOUBLE DISC PATTERN, WITH NON-RISING STEM AND BE DESIGNED FOR STEMMED 300 POUNDS WORKING PRESSURE. ALL VALVES SHALL OPEN LEFT.

5. ALL WATER MAIN SHALL BE PRESSURE TESTED TO 150 POUNDS STATIC PRESSURE, IN ACCORDANCE WITH THE REQUIREMENTS OF THE VILLAGE OF PALATINE.

6. MAXIMUM ALLOWABLE LEAKAGE SHALL BE 4 GALLONS PER INCH OF PIPE DIA. /1000 FT. OF PIPE/24 HRS. PER CITY REQUIREMENTS. TESTING SHALL BE IN ACCORDANCE WITH "PROCEDURES FOR PRESSURE TESTING AND DISINFECTION OF WATER MAINS AND WATER SERVICES WITHIN THE VILLAGE OF PALATINE.

7. AFTER THE PRESSURE TEST HAS BEEN ACCEPTED, THE CONTRACTOR SHALL CHLORINATE THE WATER MAINS WITH GAS IN ACCORDANCE WITH THE REQUIREMENTS OF AWWA, THE ILLINOIS EPA, AND THE VILLAGE OF PALATINE. CHLORINATION SHALL BE PERFORMED UNDER THE DIRECTION OF THE VILLAGE ENGINEER AND WATER DEPARTMENT.

8. A MINIMUM HORIZONTAL DISTANCE OF 10 FEET SHALL BE MAINTAINED BETWEEN THE WATER MAIN AND ANY SEWERS WHEN THEY ARE PARALLEL. WHENEVER A SEWER CROSSES A WATER MAIN, A MINIMUM VERTICAL DISTANCE OF 18 INCHES MUST BE MAINTAINED BETWEEN THE OUTSIDE OF THE PIPES, AND THE SEWER JOINTS ARRANGED SO THEY ARE EQUIDISTANT AS FAR AS POSSIBLE FROM THE WATER MAIN JOINTS. WHEN IT IS NECESSARY FOR A SEWER TO CROSS OVER THE TOP OF A WATER MAIN, THE FOLLOWING METHOD MUST ALSO BE CONSTRUCTED: A) THE SEWER SHALL BE DESIGNED AND CONSTRUCTED EQUAL TO WATER MAIN PIPE FOR A DISTANCE 10 FEET EITHER SIDE OF THE CROSSING AND SHALL BE PRESSURE-TESTED TO INSURE WATER TIGHTNESS PRIOR TO BACKFILLING.

9. THE WATER SERVICE PIPE SHALL BE 1 1/4" DIA. TYPE K COPPER. CORPORATION COCK SHALL BE MUELLER #H15000. THE CURB STOP SHALL BE MUELLER #H15154 AND THE SERVICE BOX SHALL BE MUELLER #H10302. ALL ITEMS SHALL CONFORM TO THE REQUIREMENTS OF THE VILLAGE OF PALATINE.

10. NO OBJECT MAY BE CONSTRUCTED, MAINTAINED, OR INSTALLED WITHIN 48 INCHES OF A FIRE HYDRANT. NO TREES, BUSHES, WALLS, OR OTHER OBSTACLES WHICH MAY HIDE OR IMPEDE THE USE OF A FIRE HYDRANT WILL BE PERMITTED.

11. HYDRANTS SHALL BE PAINTED WITH APPROVED PAINT.

12. ALL FIRE HYDRANTS SHALL BE EAST JORDAN OR APPROVED EQUAL, BREAK AWAY STYLE TRAFFIC DESIGN. SAID HYDRANTS SHALL HAVE A 5-1/4 INCH VALVE OPENING, 8-INCH DIAMETER STANDPIPE, TWO 2-1/2 INCH HOSE NOZZLES AND ONE 4-1/2 INCH PUMPER NOZZLE, ALL WITH NATIONAL/ STANDARD THREADS. HYDRANTS SHALL HAVE SIX FOOT DEPTH OF BURY AND BE FURNISHED MECHANICAL JOINTED. THE SIZE OF THE INLET CONNECTION SHALL BE 6-INCH. ON THE SIX INCH LINE CONNECTING THE HYDRANT TO THE MAIN SHALL BE PLACED A SIX-INCH GATE VALVE AND ROADWAY BOX, MUELLER #H-10360 OR EQUAL. THE OPERATING NUT SHALL BE THE NATIONAL STANDARD OF 1-1/2 INCH PENTAGON MEASURED FROM POINT TO OPPOSITE FLAT. HYDRANTS SHALL OPEN COUNTER CLOCKWISE. ALL PUBLIC HYDRANTS SHALL BE FURNISHED RED IN COLOR, AND SHALL BE PLACED SO THAT THE CENTER OF THE PUMPER NOZZLE IS 24 TO 36 INCHES ABOVE THE GROUND LINE. A HOLE OF 1/2 CUBIC YARD VOLUME SHALL BE DUG AT EACH HYDRANT AND FILLED WITH WASHED GRAVEL TO ACT AS A DRAIN. HYDRANTS TO CONFORM TO AWWA C-502.

13. FIRE HYDRANTS SHALL BE PLACED 3 TO 7 FEET FROM THE BACK OF CURB TO THE FACE OF HYDRANT, WITH 3 FEET BEING THE PREFERRED DISTANCE., AS SHOWN ON THE DETAIL. HYDRANTS SHALL NOT HAVE LESS THAN 36" CLEARANCE BETWEEN THE BACK OF CURB AND THE NEAREST PART OF THE HYDRANT AND MIN. 2' FROM SIDEWALK.

ALL SANITARY SEWER SERVICES SHALL BE 6" PVC WITH A MINIMUM SLOPE OF 1% AND WHEN A WATER SERVICE CROSSES ABOVE A WATERMAIN, THE SANITARY SERVICE SEWER SHALL BE WATERMAIN QUALITY PIPE PVC (ASTM D-2241) OR DIP.

SANITARY SEWER NOTES

1. ALL SANITARY PIPE AND SERVICES SHALL BE P.V.C. (S.D.R. 26) PIPE CONFORMING TO ASTM D-3034 WITH GASKET JOINTS CONFORMING TO ASTM D-3212. ANY OTHER PIPE MATERIALS MUST CONFORM TO THE VILLAGE.

2. ALL FLOOR DRAINS SHALL DISCHARGE TO THE SANITARY SEWER.

3. ALL DOWNSPOUTS AND OUTSIDE DRAINS SHALL DISCHARGE TO GRADE AND NOT TO THE SANITARY SEWER.

4. ALL SANITARY SEWER CONSTRUCTION REQUIRES STONE BEDDING MATERIAL 1/4" TO 3/4" IN SIZE, WITH A THICKNESS BELOW THE BOTTOM OF THE PIPE OF NOT LESS THAN 4" AND EXTENDING TO A MINIMUM OF 12" ABOVE THE TOP BACKFILL SHALL BE CA-11/13, 100% CRUSHED PER ASTM D-2321, EQUIVELANT TO CLASS I OR APPROVED EQUAL.

5. "BAND-SEAL" OR SIMILAR FLEXIBLE-TYPE COUPLINGS SHALL BE USED IN THE CONNECTION OF SEWER PIPE OF DISSIMILAR MATERIALS. ALL HARDWARE ASSOCIATED WITH THE COUPLINGS SHALL BE OF STAINLESS STEEL.

6. WHEN CONNECTING TO AN EXISTING SEWER MAIN BY MEANS OTHER THAN AN EXISTING WYE, TEE, OR AN EXISTING MANHOLE, ONE OF THE FOLLOWING METHODS SHALL BE USED: A.) REMOVE AN ENTIRE SECTION OF PIPE (BREAKING ONLY THE TOP OF ONE BELL) AND REPLACE WITH A WYE OR TEE BRANCH SECTION. B.) WITH PIPE CUTTER, NEATLY AND ACCURATELY CUT OUT DESIRED LENGTH OF PIPE FOR INSERTION OF PROPER FITTING, USING "BAND-SEAL" OR SIMILAR COUPLINGS TO HOLD IT FIRMLY IN PLACE. C.) INSTALL A NEW MANHOLE.

7. ALL SEPTIC TANKS (IF ANY) BEING ABANDONED SHALL BE FILLED OR REMOVED. APPROVAL MUST BE OBTAINED FROM THE COUNTY HEALTH DEPARTMENT. ALL SEWER CONNECTIONS SHALL BE MADE UPSTREAM FROM THE TANK. CONTRACTORS SHALL OBTAIN ANY NECESSARY PERMITS FOR REMOVAL.

8. ALL SANITARY AND STORM MANHOLES SHALL BE PRECAST CONCRETE, TYPE A WITH PRECAST CONCRETE ADJUSTING RINGS, AND SHALL HAVE A MINIMUM INSIDE DIAMETER OF 48 INCHES. THE MANHOLE FRAME SHALL BE SECURED TO THE MANHOLE WITH MASTIC OR MORTAR.

9. A MINIMUM HORIZONTAL DISTANCE OF 10 FEET SHALL BE MAINTAINED BETWEEN THE WATER MAIN AND ANY SEWERS WHEN THEY ARE PARALLEL. WHENEVER A SEWER CROSSES A WATER MAIN, A MINIMUM VERTICAL DISTANCE OF 18 INCHES MUST BE MAINTAINED BETWEEN THE OUTSIDE OF THE PIPES, AND THE SEWER JOINTS ARRANGED SO THEY ARE EQUIDISTANT AND AS FAR AS POSSIBLE FROM THE WATER MAIN JOINTS. WHEN IT IS NECESSARY FOR A SEWER TO CROSS OVER THE TOP OF A WATER MAIN, THE FOLLOWING METHOD MUST ALSO BE CONSTRUCTED: A.) THE SEWER SHALL BE DESIGNED AND CONSTRUCTED EQUAL TO THE WATER MAIN PIPE FOR A DISTANCE TEN (10) FEET EITHER SIDE OF THE CROSSING AND SHALL BE PRESSURE-TESTED TO INSURE WATER TIGHTNESS PRIOR TO BACKFILLING.

10. ALL SANITARY SEWERS SHALL BE TESTED IN KEEPING WITH VILLAGE REQUIREMENTS. INFILTRATION SHALL NOT EXCEED 100 GALLONS/INCH DIAMETER/MILE/DAY. ALL SANITARY & STORM SEWERS MUST BE TELEVISED AND THE TAPES MUST BE SUBMITTED TO THE VILLAGE ENGINEER.WRITTEN (TYPED) LOGS SHALL BE SUBMITTED TO THE VILLAGE DETAILING SERVICE WYE LOCATIONS AND DEFECTS, ETC. LOCATED. AIR TESTING AND DEFLECTION TESTING OF ALL SANITARY SEWERS IS REQUIRED. CONSTRUCTION SHALL CONFORM TO "ILLINOIS RECOMMENDED STANDARDS FOR SEWAGE WORKS", LATEST EDITION, PUBLISHED BY THE ILLINOIS E.P.A. EXCEPT FOR CONFLICTS WITH THE VILLAGE OF PALATINE PROCEDURES, WHERE THE VILLAGE ORDINANCE SHALL TAKE PRECEDENCE.

11. ALL MANHOLES, CATCHBASINS & VALVE VAULTS IN STREET SHALL BE SET IN A FULL MORTOR BED.

STREET LIGHTING

1. STREET LIGHT POLES AND FIXTURES SHALL BE CONSTRUCTED AT LOCATIONS SHOWN ON THE ENGINEERING DRAWINGS. THE TYPE OF POLE AND FIXTURES SHALL BE ACCEPTABLE TO THE VILLAGE. CATALOG CUTS MUST BE SUBMITTED FOR APPROVAL PRIOR TO ORDERING ANY MATERIALS.

2. NO UNDERGROUND SPLICES WILL BE ALLOWED. ALL SPLICES SHALL BE MADE IN THE BASES OF THE LIGHT POLES OR IN HANDHOLES USING 3M SPLICE KIT.

3. CONDUIT SHALL BE BURIED A MINIMUM OF 30 INCHES BELOW THE PROPOSED GRADE.

4. CABLE LENGTHS SHALL INCLUDE SLACK AS REQUIRED.

5. THE CONTRACTOR SHALL COORDINATE THE CONNECTION AND SERVICE POINTS WITH COMMONWEALTH EDISON COMPANY.

6. NO. 8 BARE COPPER GROUND WIRE SHALL BE INSTALLED IN TRENCH, 6" ABOVE LIGHTING CABLE.

7. ALL ELECTRIC CABLE SHALL BE #8AWG IN 1-1/4" UNIT DUCT. ALL ELECTRIC CABLE SHALL BE INSTALLED IN 2" DIA. GALVANIZED STEEL CONDUIT UNDER ALL PAVEMENT CROSSINGS.

8. ALL GRC IS TO BE INSTALLED WITH PROTECTIVE BUSHING ON ENDS.

9. 2" GRC TO EXTEND A MINIMUM OF 6" ON EITHER SIDE OF DRIVEWAYS, SIDEWALKS & STREET CROSSINGS.

10. IF DRIVEWAY LOCATIONS ARE UNKNOWN AT THE TIME OF CONSTRUCTION, THEN CONDUIT SHALL BE EXTENDED TO INCLUDE THE ENTIRE LOT LENGTH.

EARTHWORK, GRADING, AND PAVING

1. ALL PROPOSED PAVEMENT AREAS SHALL BE STRIPPED OF ALL TOPSOIL AND UNSUITABLE MATERIAL AND EXCAVATED OR FILLED TO WITHIN 0.10 FEET OF DESIGN SUBGRADE.

2. THE SUBGRADE SHALL BE FREE OF ALL UNSUITABLE MATERIAL AND SHALL BE COMPACTED TO A MINIMUM 95 PER CENT OF MODIFIED PROCTOR DENSITY.

3. THE SUBGRADE SHALL BE INSPECTED BY A QUALIFIED SOILS TESTING LABORATORY REPRESENTATIVE.

4. STOCKPILING OF SOIL SHALL BE AT LOCATIONS DESIGNATED BY OWNER. AND AS SHOWN ON THE PLANS.

5. THE EARTHWORK CONTRACTOR SHALL BE RESPONSIBLE FOR REMOVAL OF SPOIL MATERIAL FROM THE UNDERGROUND CONTRACTORS, PREPARING THE ROADWAY SUBGRADE, PLACING TOPSOIL TO A MINIMUM DEPTH OF 6 INCHES TO FINISHED GRADE, GRADING OR DRAINAGE SWALES, AND ALL OTHER TASKS AS DIRECTED BY THE OWNER OR ENGINEER.

6. THE QUANTITIES CONTAINED IN THESE DOCUMENTS ARE APPROXIMATE AND ESTIMATED, AND ARE PRESENTED AS A GUIDE TO THE CONTRACTOR IN DETERMINING ALL QUANTITIES AND TO BECOME FAMILIAR WITH THE SITE AND SOIL CONDITIONS.

7. THE EARTHWORK CONTRACTOR IS RESPONSIBLE FOR MAINTAINING POSITIVE DRAINAGE AT THE CONCLUSION OF EACH WORKING DAY.

8. THE PAVING CONTRACTOR IS RESPONSIBLE FOR THE FINAL SUBGRADE PREPARATION, THE PAVEMENT BASE, BINDER, AND SURFACE, AND ALL FINAL CLEAN-UP AND RELATED WORK ASSOCIATED WITH THE PAVING OPERATION.

9. THE PROPOSED CURB AND GUTTER AND PAVEMENT SHALL BE OF THE TYPE AND THICKNESS AS SPECIFIED IN THE ENGINEERING DRAWINGS, AND CONSTRUCTED IN STRICT CONFORMANCE WITH THE PREVIOUS REFERENCED STANDARD SPECIFICATIONS, AND THE REQUIREMENTS OF THE VILLAGE OF PALATINE

10. THE COMBINATION CURB AND GUTTER SHALL BE CONSTRUCTED OF I.D.O.T. CLASS SI CONCRETE AND SHALL BE IN STRICT CONFORMANCE WITH THE PROVISIONS OF SECTION 720.04 OF STANDARD SPECIFICATIONS..., CURRENT EDITION. ALL CURB AND GUTTER SHALL BE BROOM FINISHED.

11. CURING AND PROTECTION OF ALL CONCRETE SHALL BE IN STRICT CONFORMANCE WITH THE PROVISIONS OF SECTION 720.13 OF STANDARD SPECIFICATIONS, CURRENT EDITION.

12. THE CURB AND GUTTER SHALL HAVE TWO (2) 3/4"-THICK PREMOULDED FIBER EXPANSION JOINTS WITH 3/4"-DIAMETER BY 18-INCH LONG PLAIN ROUND STEEL DOWEL BARS AT 100-FOOT INTERVALS, AT ALL PC'S AND PT'S, AND AT ALL CURB RETURNS. CONTRACTION JOINTS SHALL BE CONSTRUCTED AT 10-FOOT INTERVALS. THE COST OF THESE JOINTS SHALL BE INCIDENTAL TO THE CURB AND GUTTER.

13. DEPRESSED CURB SHALL BE PROVIDED FOR HANDICAPPED RAMPS AT ALL SIDEWALKS ABUTTING THE CURB AND GUTTER.

SCHEDULE OF CASTINGS

	GRASS AREA	PAVEMENT AREA	IMPRINT
VALVE VAULTS	R-1712-C	R-1712-C	"WATER"
CATCHBASIN TYPE A	R-4340-B	R-3501-P R-3010 IN B-6.18 CURB R-3170 IN B-6.12 CURB R-3501-P IN M-3.12 CURB	NONE
STORM MANHOLE TYPE A	R-1712-C	R-1712-C	"STORM"
SANITARY MANHOLE TYPE A	R-1712-C	R-1712-C	"SANITARY"
SANITARY MANHOLE STEPS	PS-I PLASTIC COATED BY MA INDUSTRIES OR APPROVED EQUAL	PS-I PLASTIC COATED BY MA INDUSTRIES OR APPROVED EQUAL	NONE

ALL CASTINGS SHALL BE NEENAH OR APPROVED EQUAL
ALL GRATES SHALL BE BICYCLE-SAFE, AS APPLICABLE
ALL SANITARY MANHOLE LIDS SHALL BE SELF-SEALING, GASKETED WITH CONCEALED PICKHOLE.

TABLE OF PIPE & JOINT SPECIFICATIONS

USE	MATERIAL	GRADE SPEC.	JOINT SPEC.
STORM	R.C.P.	IV C-76	O-RING JOINT C-443
SANITARY SERVICE	P.V.C.	SDR-26 ASTM D-3034	JOINT ASTM D-3212 GASKET F-477
SANITARY SEWER	P.V.C.	SDR-26 ASTM D-3034	JOINT ASTM D-3212 GASKET F-477
WATER MAIN	D.I.P.	CL.52 ANSI/AWWA C151/A21.4	ANSI/AWWA F477 ASTM D-3139

NOTE:
AS A MINIMUM REQUIREMENT ALL SEWER PIPES BE LAID IN ACCORDANCE WITH THE WITH THE APPLICABLE ASTM STANDARD AND THE LATEST VERSION OF THE STANDARD SPECIFICATIONS FOR WATER AND SEWER MAIN CONSTRUCTION IN ILLINOIS

NOTES ON SEQUENCE OF EROSION CONTROL MEASURES

PRIOR TO ANY EXCAVATION WORK THE PERIMETER OF THE PROJECT SHALL BE SILT FENCED AS WELL AS ANY WETLANDS THAT ARE TO BE PROTECTED.

1. STRIPPING & STOCKPILING OF TOPSOIL AND ROUGH GRADING.
2. PLACEMENT OF ALL SILT FENCE AS SOON AS BASINS ARE COMPLETED.
3. FINAL GRADING AND CONSTRUCTION.
4. ESTABLISH PERMANENT VEGETATION OR EROSION CONTROL MATTING DURRING THE FIRST POSSIBLE GROWING SEASON.

NOTES ON SILT FENCE MAINTENANCE

1. SOIL DEPOSITS LEFT ON EROSION CONTROL DEVICES WILL BE REMOVED AFTER EACH RAINFALL.
2. IF PART OF THE SILT FENCE DETERIORATES DURING THE CONSTRUCTION, IT WILL BE REPLACED. SILT FENCES SHALL BE INSPECTED AND REPAIRED DAILY.
3. AFTER THE COURSE OF CONSTRUCTION AND AFTER GRASS HAS TAKEN, EROSION CONTROL DEVICES WILL BE REMOVED, SWALES WILL BE GRADED TO CONFORM TO THE PROPOSED GRADING PLAN, AND GRASS WILL BE PLACED IN THESE AREAS.

NOTE:
ALL STOCK PILES SHALL BE SILT FENCED & TEMPORARILY SEEDED.
ALL TEMPORARY SEEDING SHALL BE DONE WITHIN 7 DAYS OF ROUGH GRADING. ALL PERMANENT SEEDING SHALL BE DONE WITHIN 7 DAYS OF FINAL GRADING.
ALL STORM RUNOFF TO BE COLLECTED & CONVEYED TO THE DETENTION BASIN VIA STORM SEWERS.
ALL DRAINAGE CHANNELS SHALL BE SEEDED & NETTED OR SODDED AND SHALL BE INSPECTED AFTER EACH 1/2" RAINFALL. ANY MAINTENANCE REQUIRED SHALL BE DONE IMMEDIATLY.
ALL SWALES SHALL BE PROTECTED BY ROCK CHECK DAMS PER DETAIL @ 50' INTERVALS, ACCORDING TO CONSERVATION PRACTICES #910.

NOTE:
FOR TEMPORARY SEEDING USE PERENNIAL RYEGRASSAT THE RATE OF 25 LBS./ACRE. PLANT EARLY SPRING UNTIL SEPT. 30. FERTILIZE WITH LIME FERTILIZER MIXTURE IN TOP 2-4 INCHES OF TOPSOIL. USE 10-10-10 FERTILZER AT RATE OF 500 LBS./ACRE.
FOR PERMANENT SEEDING USE KENTUCKY BLUE GRASSAT RATE OF 86 LBS./ACRE. PLANT EARLY SPRING TO MAY 30 OR AUGUST 1 TO SEPT. 1 FERTILIZE 1 YEAR AFTER PLANTING WITH 10-20-10 FERTILIZER AT RATE OF 500 LBS./ACRE.

SPIES & ASSOCIATES, INC.
Civil Engineers - Land Surveyors
534 WEST CAMPUS DRIVE
ARLINGTON HEIGHTS, ILLINOIS 60004
PH 847.577.8808 FAX 847.577.0229

REVISIONS

DRAWN BY: TJS
DESIGNED BY: TJS
CHECKED BY: TJS

JOB NO. 5115
SCALE:
DATE: 06-25-18

GENERAL NOTES
GARDEN SUBDIVISION

SHEET NO. 2 OF 12 SHEETS

Attachment: ENG plans - 5115-general notes 1 (1500, 1532, and 1548 N. Hicks Road - Preliminary & Final Planned Development)

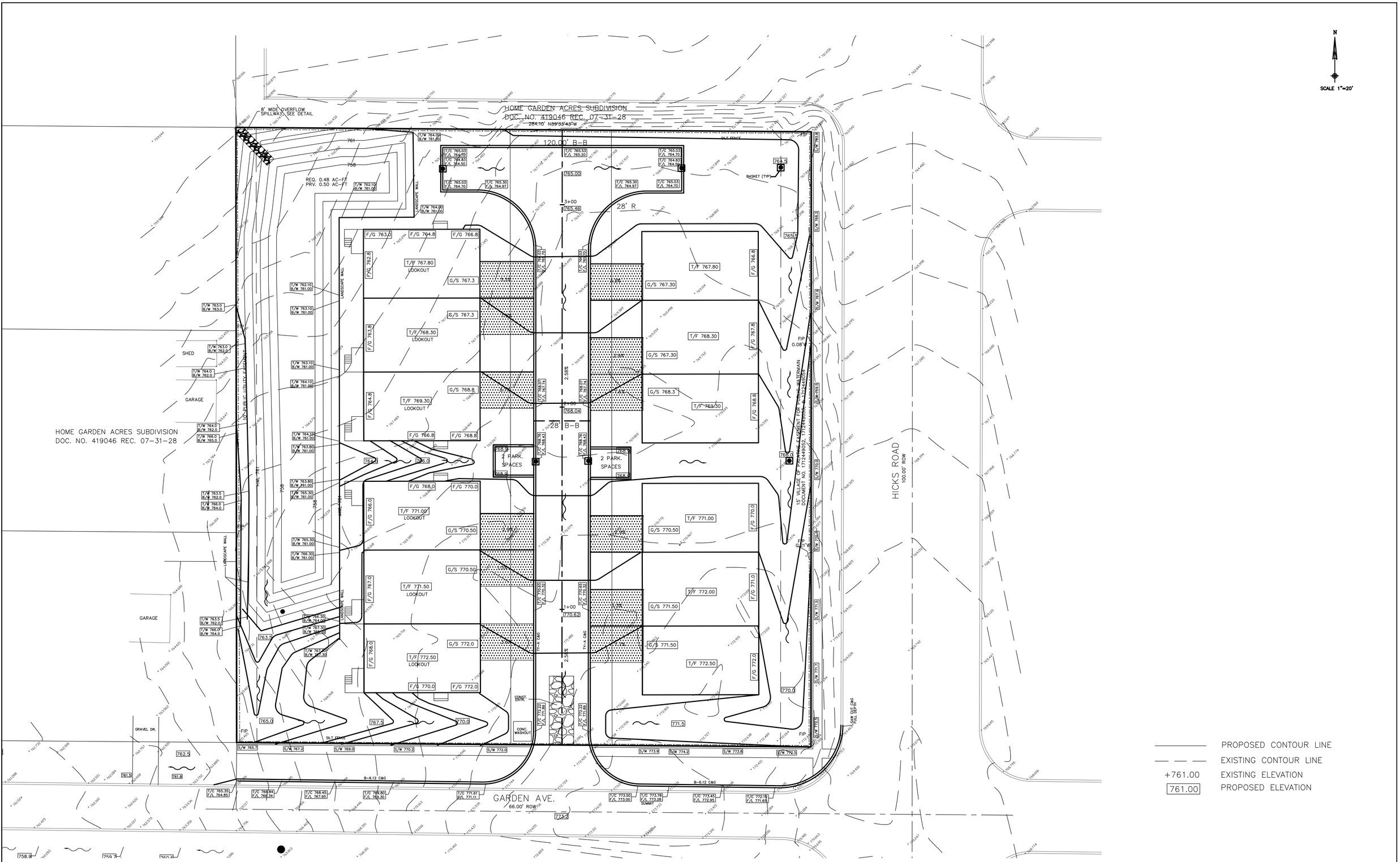

SPIES & ASSOCIATES, INC.
Civil Engineers – Land Surveyors

534 WEST CAMPUS DRIVE
ARLINGTON HEIGHTS, ILLINOIS 60004
PH 847.577.8808 FAX 847.577.0229

REVISIONS

DRAWN BY: TJS	JOB NO. 5115
DESIGNED BY: TJS	SCALE: 1"=20'
CHECKED BY: TJS	DATE: 06-25-18

GRADING & EROSION CONTROL PLAN
GARDEN SUBDIVISION

SHEET NO. 5 OF 12 SHEETS

Attachment: ENG plans - 5115-GRADING (1500, 1532, and 1548 N. Hicks Road - Preliminary & Final Planned Development)

FINAL PLAT OF SUBDIVISION OF
GARDEN SUBDIVISION

MORRISON SURVEYING CO., INC.
2710 N IL Rt 47, Morris, Illinois 60450

BRING A SUBDIVISION OF LOTS 11, 12, AND 13 IN HOME GARDEN ACRES, BEING A SUBDIVISION OF THE NORTHEAST ¼ OF THE NORTHWEST ¼ OF SECTION 11, TOWNSHIP 42 NORTH, RANGE 10 EAST OF THE THIRD PRINCIPAL MERIDIAN, RECORDED JULY 31, 1928 AS DOCUMENT NUMBER 419046, IN COOK COUNTY, ILLINOIS.

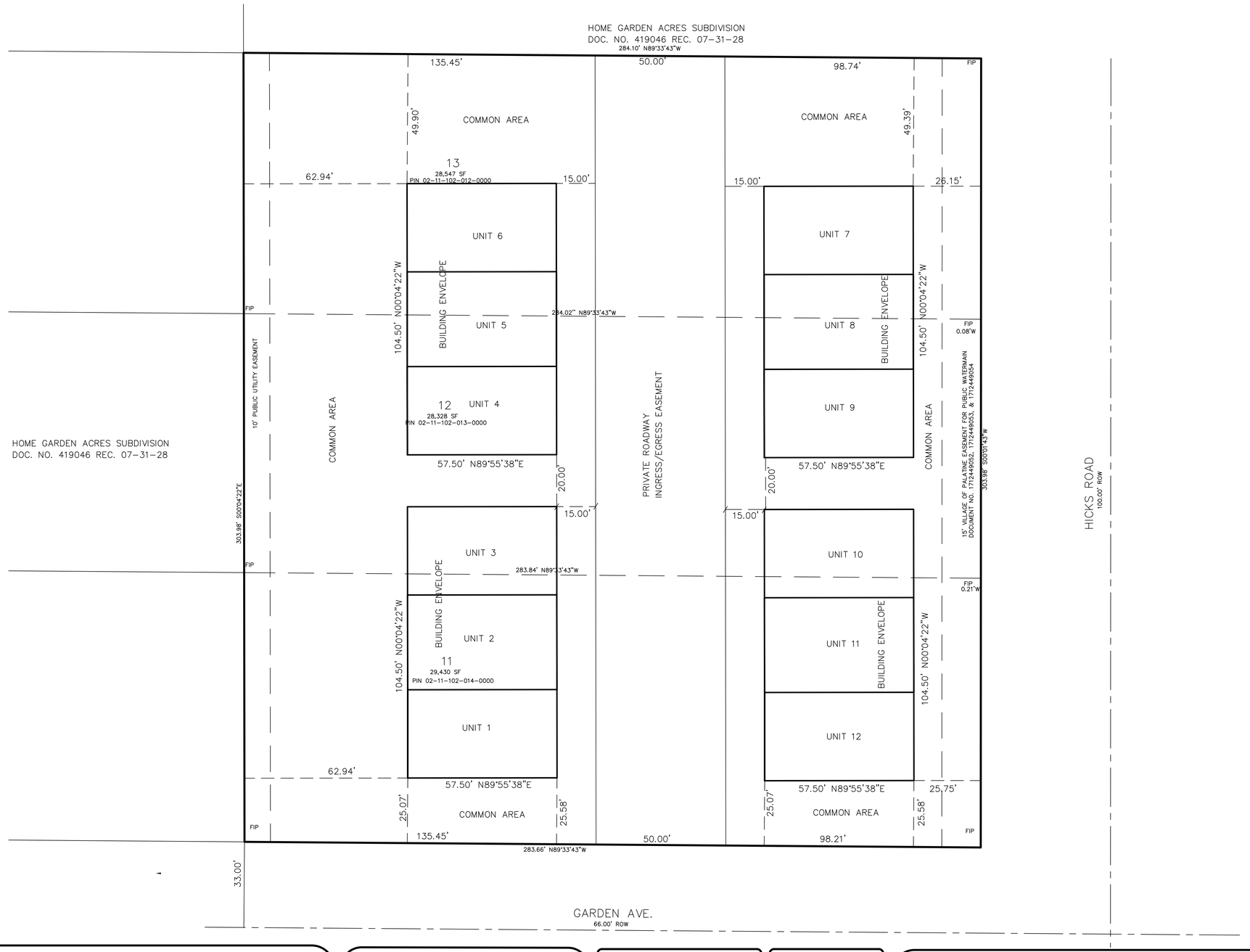

SPIES & ASSOCIATES, INC.
Civil Engineers – Land Surveyors

534 WEST CAMPUS DRIVE
ARLINGTON HEIGHTS, ILLINOIS 60004
PH 847.577.8808 FAX 847.577.0229

REVISIONS

DRAWN BY: TJS	JOB NO. 5115
DESIGNED BY: TJS	SCALE: 1"=20'
CHECKED BY: TJS	DATE: 06-25-18

FINAL PLAT OF SUBDIVISION
GARDEN SUBDIVISION

SHEET NO. 1 OF 2 SHEETS

Attachment: ENG - 5115-PLAT OF SUB 1 (1500, 1532, and 1548 N. Hicks Road - Preliminary & Final Planned Development)

FINAL PLAT OF SUBDIVISION OF
GARDEN SUBDIVISION

MORRISON SURVEYING CO., INC.
2710 N IL Rt 47, Morris, Illinois 60450

EASEMENT LANGUAGE

VILLAGE OF PALATINE EASEMENT

WHENEVER THE WORDS "PUBLIC UTILITIES" OR "PUBLIC UTILITIES EASEMENT" SHALL BE APPEAR ON THIS PLAT THE VILLAGE OF PALATINE, A MUNICIPAL CORPORATION, COOK COUNTY, ILLINOIS,M AND ITS SUCCESSORS OR ASSIGNS JOINTLY AND SEVERALLY SHALL HOLD A PERPETUAL EASEMENT UNDER, OVER AND ACROSS THE SURFACE OF THE PROPERTY SHOWN WITHIN THE LINES OF THE PLAT MARKED AS SUCH FOR THE INSTALLATION, CONSTRUCTION, USE, REPAIR AND MAINTENANCE OF ALL PUBLIC UTILITY EQUIPMENT INCLUDING BUT NOT LIMITED TO FACILITIES USED IN CONNECTION WITH THE TRANSMISSION AND DISTRIBUTION OF ELECTRICITY AND SOUNDS AND SIGNALS, WATER MAINS (INCLUDING "B" BOXES), SEWAGE MAINS AND PIPING, THE RIGHT TO CUT, TRIM OR REMOVE TREES, BUSHES AND ROOTS, AS MAY BE REASONABLY REQUIRED INCIDENT TO THE RIGHTS HEREIN GIVEN, AND THE RIGHT TO ENTER UPON THE SUBDIVIDED PROPERTY FOR ALL SUCH PURPOSES. OBSTRUCTION SHALL NOT BE PLACED OVER GRANTEES FACILITIES OR IN, UPON OR OVER THE PROPERTY WITHIN THE LINES MARKED "EASEMENT" WITHOUT THE PRIOR WRITTEN CONSENT OF THE GRANTEES, PROVIDED, HOWEVER THAT SUCH CONSENT OF THE GRANTEE SHALL NOT RELIEVE THE GRANTORS, THEIR SUCCESORS OR ASSIGNS FROM THE DUTY AND OBLIGATION TO REMOVE SUCH OBSTRUCTIONS AT THIER SOLE EXPENSE UPON THE DIRECTION OF THE GRANTEE, WHENEVER THE GRANTEE DEEMS SUCH REMOVAL NECESSARY IN ITS SOLE JUDGEMENT TO ENABLE THE GRANTEE TO REPAIR OR MAINTAIN ANY FACILITIES WITHIN THE EASEMENT OR OTHERWISE ALLOW THE GRANTEE FULL USE AND ENJOYMENT OF THE EASEMENT RIGHTS GRANTED HEREUNDER, AFTER INSTALLATION OF ANY SUCH FACILITIES. THE GRADE OF THE SUBDIVIDED PROPERTY SHALL NOT BE ALTERED IN A MANNER SO AS TO UNREASONABLY INTERFERE WITH THE PROPER OPERATION AND MAINTENANCE THEREOF.

ELECTRIC AND TELEPHONE

A PERMANENT, NONEXCLUSIVE EASEMENT FOR SERVING THE SUBDIVISION AND OTHER PROPERTY WITH ELECTRIC AND COMMUNICATION SERVICE IS RESERVED FOR AND GRANTED TO ANY ELECTRIC, TELEPHONE AND/OR COMMUNICATION COMPANY AUTHORIZED BY THE VILLAGE (REFERRED TO AS "GRANTEES"), JOINTLY AND SEVERALLY, TO INSTALL, OPERATE, MAINTAIN AND REMOVE, FROM TIME TO TIME, FACILITIES USED IN CONNECTION WITH UNDERGROUND TRANSMISSION AND DISTRIBUTION OF ELECTRICITY AND SOUNDS AND SIGNALS IN, UNDER, ACROSS, ALONG AND UPON THE SURFACE OF THE PROPERTY KNOWN AS AND/OR LABELED AS UTILITY EASEMENT, DRAINAGE AND UTILITY EASEMENT, OR UTILITY AND LANDSCAPING EASEMENT WITHIN DASHED LINES ON THE ATTACHED PLAT OF SUBDIVISION AND PROPERTY DESIGNATED ON THE PLAT FOR STREETS AND ALLEYS, TOGETHER WITH THE RIGHT TO INSTALL REQUIRED SERVICE CONNECTIONS UNDER THE SURFACE OF EACH LOT TO SERVE IMPROVEMENTS THEREON; THE RIGHT TO CUT, TRIM OR REMOVE TREES, BUSHES AND ROOTS AS MAY BE REASONABLY REQUIRED INCIDENT TO THE RIGHTS GIVEN IN THIS SECTION; AND THE RIGHT TO ENTER UPON THE SUBDIVIDED PROPERTY FOR ALL SUCH PURPOSES. OBSTRUCTIONS SHALL NOT BE PLACED OVER THE GRANTEES' FACILITIES OR IN, UPON OR OVER SUCH EASEMENTS WITHOUT PRIOR WRITTEN CONSENT OF THE GRANTEES. SUCH FACILITIES SHALL GENERALLY BE LOCATED UNDERGROUND AND, AFTER INSTALLATION OF ANY SUCH FACILITIES, THE GRADE OF THE SUBDIVIDED PROPERTY SHALL NOT BE ALTERED IN A MANNER SO AS TO INTERFERE WITH THE PROPER OPERATION AND MAINTENANCE THEREOF. THE LOCATION OF FACILITIES BY THE GRANTEES SHALL NOT CONFLICT OR INTERFERE WITH PUBLIC IMPROVEMENTS, AND ANY CONFLICTS IN USE SHALL BE SUBJECT TO RESOLUTION AND APPROVAL BY THE VILLAGE.

CABLE TELEVISION

A PERMANENT, NONEXCLUSIVE EASEMENT IS RESERVED FOR AND GRANTED TO THE VILLAGE AND/OR TO ANY CABLE TELEVISION COMPANY AUTHORIZED BY THE VILLAGE TO INSTALL CABLE TELEVISION FACILITIES WITHIN THE SUBDIVISION (REFERRED TO AS THE "COMPANY") AND TO THEIR SUCCESSORS AND ASSIGNS IN, UPON, ACROSS, UNDER AND THROUGH THE AREAS SHOWN AND/OR LABELED AS "DRAINAGE AND UTILITY EASEMENT" WITHIN DASHED LINES ON THE ATTACHED PLAT OF SUBDIVISION FOR THE PURPOSE OF INSTALLING, CONSTRUCTING, INSPECTING, OPERATING, REPLACING, RENEWING, ALTERING, ENLARGING, REMOVING, REPAIRING AND MAINTAINING CABLE TELEVISION LINES OR APPURTENANCES AND, WITHOUT LIMITATION, SUCH OTHER INSTALLATIONS AS MAY BE REQUIRED TO FURNISH CABLE TELEVISION SERVICE TO THE ATTACHED AREA AND SUCH APPURTENANCES AND ADDITIONS THERETO AS THE VILLAGE AND THE COMPANY MAY DEEM NECESSARY, TOGETHER WITH THE RIGHT OF ACCESS ACROSS THE EASEMENTS INCLUDED IN THE ATTACHED PLAT FOR THE NECESSARY MEN AND EQUIPMENT TO DO ANY AND ALL OF SUCH WORK. THE RIGHT IS ALSO GRANTED TO THE CITY AND THE COMPANY TO CUT DOWN, TRIM OR REMOVE ANY TREES, SHRUBS OR OTHER PLANTS THAT INTERFERE WITH THE OPERATION OF OR ACCESS TO SUCH LINES IN, ON, UPON, ACROSS, UNDER OR THROUGH SUCH EASEMENTS. NO PERMANENT BUILDINGS OR TREES SHALL BE PLACED ON SUCH EASEMENTS, BUT SOME MAY BE USED FOR GARDENS, SHRUBS, LANDSCAPING AND OTHER PURPOSES THAT DO NOT THEN OR LATER INTERFERE WITH SUCH USES AND RIGHTS. SUCH FACILITIES SHALL GENERALLY BE LOCATED UNDERGROUND, AND THE USE OF SUCH EASEMENT SHALL NOT CONFLICT OR INTERFERE WITH PUBLIC IMPROVEMENTS, AND ANY CONFLICTS IN USE SHALL BE SUBJECT TO RESOLUTION AND APPROVAL BY THE VILLAGE.

GAS EASEMENT

A AN EASEMENT IS HEREBY RESERVED FOR AND GRANTED TO NORTHERN ILLINOIS GAS COMPANY, AN ILLINOIS CORPORATION, DOING BUSINESS AS NICOR GAS COMPANY, ITS SUCCESSORS AND ASSIGNS (HEREINAFTER "NICOR") TO INSTALL, OPERATE, MAINTAIN, REPAIR, REPLACE AND REMOVE, FACILITIES USED IN CONNECTION WITH THE TRANSMISSION AND DISTRIBUTION OF NATURAL GAS IN, OVER, UNDER, ACROSS, ALONG, AND UPON THE SURFACE OF THE PROPERTY SHOWN ON THIS PLAT MARKED "EASEMENT", "UTILITY EASE,EMT", P.U.&D.E., "COMMON AREA OR AREAS", (OR SIMILAR DESIGNATIONS), STREETS AND ALLEYS, WHETHER PUBLIC OR PRIVATE, AND THE PROPERTY DESIGNATED IN THE DECLARATION OF CONDOMINIUM AND/OR ON THIS PLAT AS "COMMON ELEMENTS", TOGETHER WITH THE RIGHT TO INSTALL REQUIRED SERVICE CONNECTIONS OVER OR UNDER THE SURFACE OF EACH LOT AND COMMON AREA OR AREAS TO SERVE THE IMPROVEMENTS THEREON, OR ON ADJACENT LOTS AND COMMON AREA OR AREAS, AND TO SERVE OTHER PROPERTY, ADJACENT OR OTHERWISE, AND THE RIGHT TO REMOVE OBSTRUCTIONS, INCLUDING BUT NOT LIMITED TO, TREES, BUSHES, ROOTS, AND FENCES, AS MAY BE REASONABLY REQUIRED INCIDENT TO THE RIGHTS HEREIN GIVEN, AND THE RIGHT TO ENTER UPON THE PROPERTY FOR ALL SUCH PURPOSES. OBSTRUCTIONS SHALL NOT BE PLACED OVER NICOR FACILITIES OR IN, UPON OR OVER THE PROPERTY IDENTIFIED ON THIS PLAT FOR UTILITY PURPOSES WITHOUT THE PRIOR WRITTEN CONSENT OF NICOR. AFTER INSTALLATION OF ANY SUCH FACILITIES, THE GRADE OF THE PROPERTY SHALL NOT BE ALTERED IN A MANNER SO AS TO INTERFERE WITH THE PROPER OPERATION AND MAINTENANCE THEREOF.

THE TERM "COMMON ELEMENT" SHALL HAVE THAT MEANING SET FORTH FOR SUCH TERMS IN SECTION 605/2(e) OF THE "CONDOMINIUM POLICY ACT" (ILLINOIS COMPILED STATUTES, CH 765, SEC. 605/2(e)), AS AMENDED FROM TIME TO TIME.

THE TERM "COMMON AREA OR AREAS" IS DEFINED AS A LOT OR PARCEL OF REAL PROPERTY, INCLUDING REAL PROPERTY SURFACED WITH INTERIOR DRIVEWAYS AND WALKWAYS, THE BENEFICIAL USE AND ENJOYMENT OF WHICH IS RESERVED IN WHOLE AS AN APPURTENANCE TO THE SEPARATELY OWNED LOTS, PARCELS OR AREAS WITHIN THE PROPERTY, EVEN THOUGH SUCH AREAS MAY BE DESIGNATED ON THIS PLAT BY OTHER TERMS.

COMMONWEALTH EDISON COMPANY

BY:_____ DATE:_____

TITLE:_____

AMERITECH ILLINOIS:

BY:_____ DATE:_____

TITLE:_____

AT&T COMCAST:

BY:_____ DATE:_____

TITLE:_____

NORTHERN ILLINOIS GAS COMPANY (NICOR):

BY:_____ DATE:_____

TITLE:_____

Permission to record the plat is hereby granted to:

_____
(NAME)

_____
(ADDRESS)

_____

_____

Permanent Index Number:
02-11-102-012
02-11-102-013
02-11-102-014

EASEMENT PROVISIONS
An easement for serving the subdivision and other property with electric and communication service is hereby reserved for and granted to

Commonwealth Edison Company
and
SBC Telephone Company, Grantees,

their respective licensees, successors and assigns jointly and severally, to construct, operate, repair, maintain, modify, reconstruct, replace, supplement, relocate and remove, from time to time, poles, guys, anchors, wires, cables, conduits, manholes, transformers, pedestals, equipment cabinets or other facilities used in connection with overhead and underground transmission and distribution of electricity, communications, sounds and signals in, over, under, across, along and upon the surface of the property shown within the dashed or dotted lines (or similar designation) on the plat and marked "Easement", "Utility Easement", "Public Utility Easement", "P.U.E"(or similar designation), the property designated in the Declaration of Condominium and/or on this plat as "Common Elements", and the property designated on the plat as "common area or areas", and the property designated on the plat for streets and alleys, whether public or private, together with the rights to install required service connections over or under the surface of each lot and common area or areas to serve improvements thereon, or on adjacent lots, and common area or areas, the right to cut, trim or remove trees, bushes, roots and saplings and to clear obstructions from the surface and subsurface as may be reasonably required incident to the rights herein given, and the right to enter upon the subdivided property for all such purposes. Obstructions shall not be placed over Grantees'facilities or in, upon or over the property within the dashed or dotted lines (or similar designation) marked "Easement", "Utility Easement", "Public Utility Easement", "P.U.E"(or similar designation) without the prior written consent of Grantees. After installation of any such facilities, the grade of the subdivided property shall not be altered in a manner so as to interfere with the proper operation and maintenance thereof.

The term "Common Elements"shall have the meaning set forth for such term in the "Condominium Property Act", Chapter 765 ILCS 605/2(c), as amended from time to time.

The term "common area or areas"is defined as a lot, parcel or area of real property, the beneficial use and enjoyment of which is reserved in whole or as an apportionment to the separately owned lots, parcels or areas within the planned development, even though such be otherwise designated on the plat by terms such as "outlots", "common elements", "open space", "open area", "common ground", "parking"and "common area". The term "common area or areas", and "Common Elements"include real property surfaced with interior driveways and walkways, but excludes real property physically occupied by a building, Service Business District or structures such as a pool, retention pond or mechanical equipment.

Relocation of facilities will be done by Grantees at cost of the Grantor/Lot Owner, upon written request.

School Districts:

Elementary School District #_____

High School District #_____

Send the tax bill to :

_____
(NAME)

_____
(ADDRESS)

_____

_____

NOTARY CERTIFICATE

State of Illinois)
County of Cook) S.S.

I,_____ a notary public in and for said county in the state aforesaid, do hereby certify that _____ are personally known to me to be the same persons whose names are subscribed to the foregoing instrument as such owners, appeared before me this day in person and acknowledged that they signed and delivered said instrument of their own free and voluntary act and as the free and voluntary act for the uses and purposes therein set forth.

Given under my hand and notarial seal this _____ day of _____, A.D., _____.

_____
Notary Public

My commision expires on _____

OWNER'S CERTIFICATE

State of Illinois)
County of Cook) S.S.

This is to certify that _____are the owners of the property described hereon and that they have caused the said property to be surveyed and subdivided as shown hereon, for the uses and purposes therein set forth, and do hereby acknowledge and adopt the same under the title hereon indicated.

Dated this _____ day of _____, A.D., _____

_____
OWNER

ENGINEERING APPROVAL CERTIFICATE

State of Illinois)
County of Cook) SS

This plat has been checked for conformance to Village of Palatine standards and requirements and working drawings and specifications for streets, curb and gutter, watermains, sanitary sewer mains, storm water drainage and grading, sidewalks, street lights and street trees and soil erosion control have been prepared in conformance with the Village of Palatine standards and requirements and all engineering fees due the Village of Palatine have been paid.

_____ _____
Village Engineer Date

SURFACE WATER DRAINAGE STATEMENT

We hereby certify to the best of our knowledge and belief that adequete provisions have been made for the diversion and detention of surface waters into public areas or drains within the rights of the subdivision and that such surface waters will not be deposited on adjacent land owners property in such concentration as may cause damage by erosion or sedimentation to such property because of construction of the subdivision.

By _____ Dated _____
Owner

By _____ Dated 06-25-18
Illinois Professional Engineer #62-42874

TIMOTHY J. SPIES
62-42874
REGISTERED
PROFESSIONAL
ENGINEER
OF
ILLINOIS

PLAN COMMISION

State of Illinois)
County of Cook) S.S.

Approved by the plan commision of the Village of Palatine, Cook County, Illinois, at a meeting held this _____ day of _____, A.D., _____.

Signed: _____
Chairman

Attest: _____
Secretary

VILLAGE COLLECTOR

I do hereby certify that there no deferred special assessments or unpaid current assessments due against the land included in the above plat.

Dated this _____ day of _____, A.D., _____.

By: _____
Village Collector

VILLAGE COUNCIL

State of Illinois)
County of Cook) S.S.

Approved by the Village Council of the Village of Palatine, Cook County, Illinois,

this_____ day of _____, A.D., _____

Signed: _____
Mayor

Attest: _____
Clerk

SURVEYOR'S CERTIFICATE

State of Illinois)
County of Cook) S.S.

I, Matthew James Morrison, an Illinois Professional Land Surveyor, hereby certify that I have surveyed and subdivided and platted for the owners thereof the following described property to wit:

BRING A SUBDIVISION OF LOTS 11, 12, AND 13 IN HOME GARDEN ACRES, BEING A SUBDIVISION OF THE NORTHEAST ¼OF THE NORTHWEST ¼ OF SECTION 11, TOWNSHIP 42 NORTH, RANGE 10 EAST OF THE THIRD PRINCIPAL MERIDIAN, RECORDED JULY 31, 1928 AS DOCUMENT NUMBER 419046, IN COOK COUNTY, ILLINOIS.

I also certify that the land included by said survey falls within the corporate limits of the Village of Palatine, Illinois.

I further declare, based upon a review of the flood insurance rate map (F.I.R.M.) Community Panel Number 17031C0181J with effective date August 19, 2009, it is our opinion that a portion of said property does not fall within a special flood hazard area as identified by said F.I.R.M. maps.

This plat correctly represents said survey and subdivision in every detail. All lot corners are marked with an iron pipe unless otherwise noted. Dimensions are in feet and decimal parts thereof, corrected to 62 degrees F. temperature.

Arlington Heights, Illinois, this 25TH day of June, A.D., 2018

_____
IMatthew James Morrison IPLS #35-3735 EXP 11-30-18

MATTHEW JAMES MORRISON
35-3735
PROFESSIONAL
LAND
SURVEYOR
STATE OF
ILLINOIS
MORRIS, IL

SPIES & ASSOCIATES, INC.
Civil Engineers – Land Surveyors
534 WEST CAMPUS DRIVE
ARLINGTON HEIGHTS, ILLINOIS 60004
PH 847.577.8808 FAX 847.577.0229

REVISIONS

DRAWN BY: TJS	JOB NO. 5115
DESIGNED BY: TJS	SCALE: NONE
CHECKED BY: TJS	DATE: 06-25-18

FINAL PLAT OF SUBDIVISION
GARDEN SUBDIVISION

SHEET NO. 2 OF 2 SHEETS

Attachment: ENG plans - 5115-PLAT OF SUB 2 (1500, 1532, and 1548 N. Hicks Road - Preliminary & Final Planned Development)

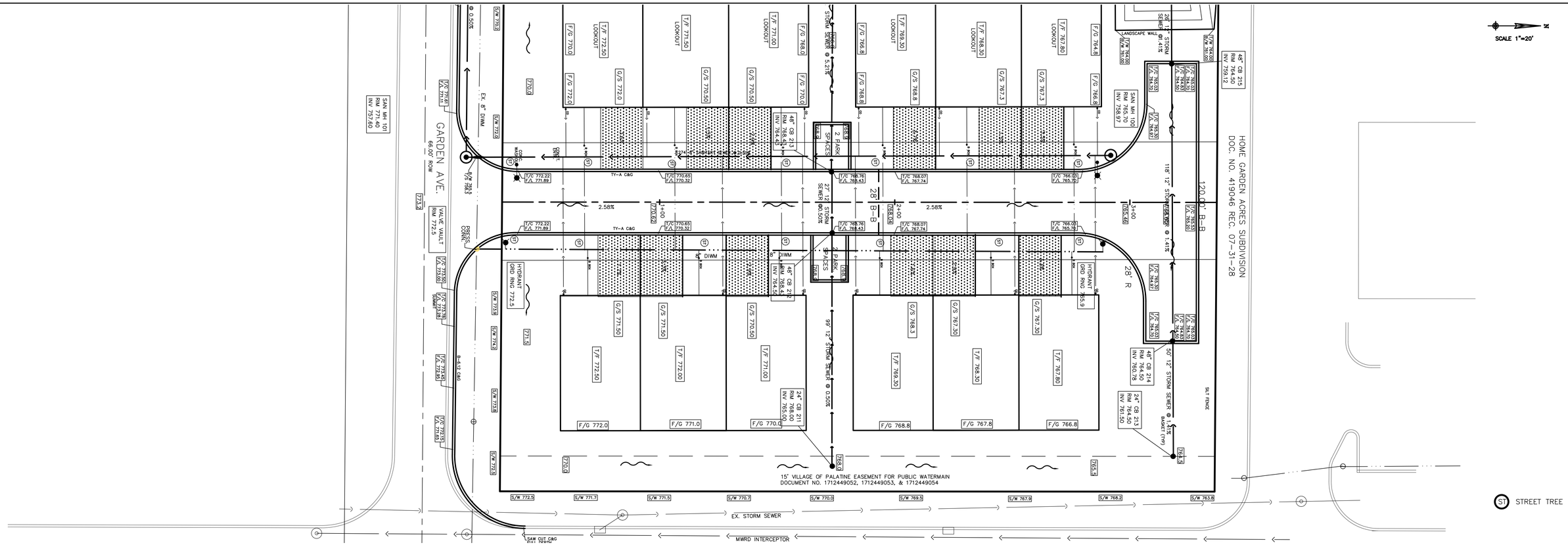

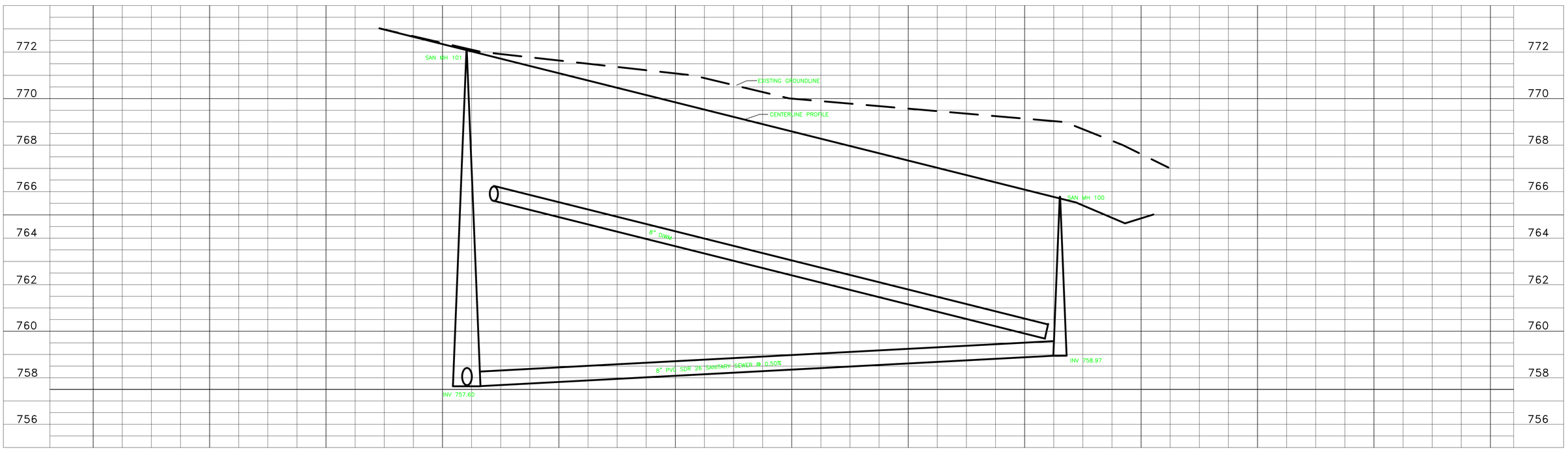

SPIES & ASSOCIATES, INC.
Civil Engineers – Land Surveyors
534 WEST CAMPUS DRIVE
ARLINGTON HEIGHTS, ILLINOIS 60004
PH 847.577.8808 FAX 847.577.0229

DRAWN BY: TJS	JOB NO. 5115
DESIGNED BY: TJS	SCALE: 1"=20'
CHECKED BY: TJS	DATE: 06-25-18

SITE ROAD PROFILE
GARDEN SUBDIVISION

SHEET NO. 7 OF 12 SHEETS

Attachment: ENG plans - 5115-PROFILES 1 (1500, 1532, and 1548 N. Hicks Road - Preliminary & Final Planned Development)

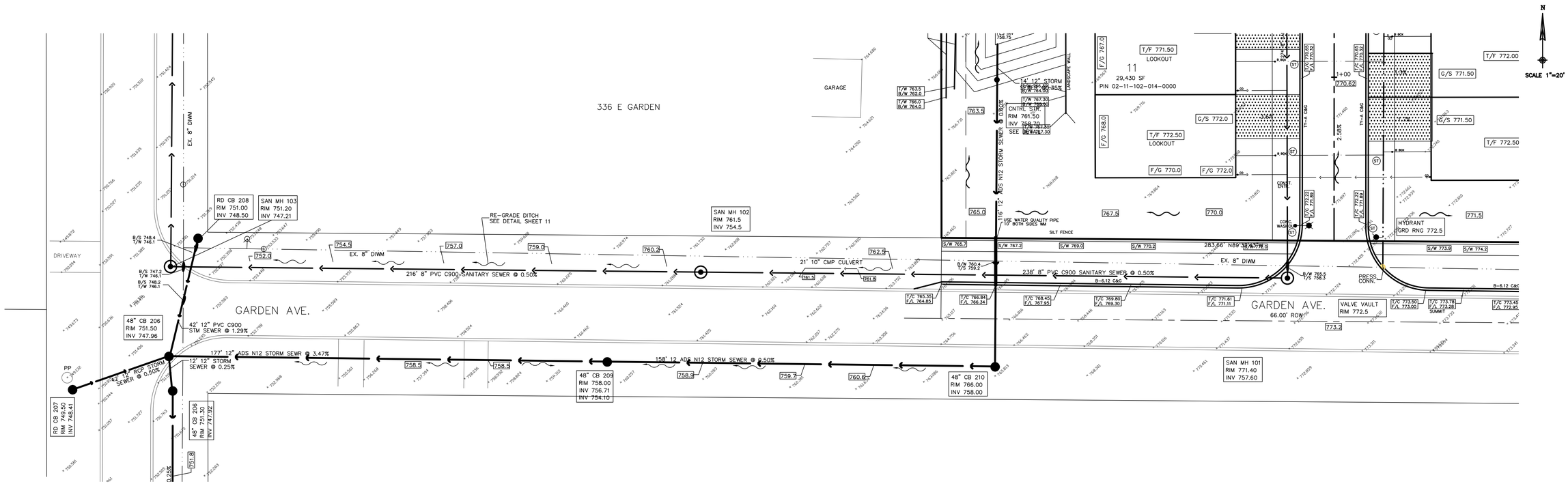

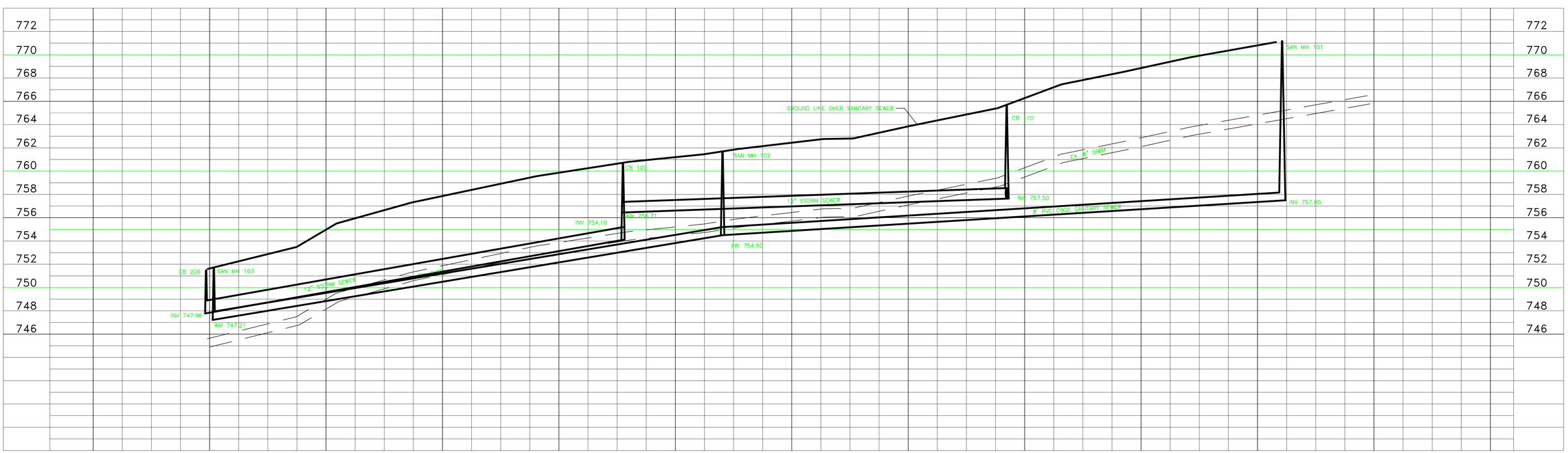

SPIES & ASSOCIATES, INC.
Civil Engineers – Land Surveyors
534 WEST CAMPUS DRIVE
ARLINGTON HEIGHTS, ILLINOIS 60004
PH 847.577.8808 FAX 847.577.0229

REVISIONS

DRAWN BY: TJS	JOB NO. 5115
DESIGNED BY: TJS	SCALE: 1"=20'
CHECKED BY: TJS	DATE: 06-25-18

GARDEN AVENUE PROFILE
GARDEN SUBDIVISION

SHEET NO. 8 OF 12 SHEETS

Attachment: ENG plans - 5115-PROFILES 2 (1500, 1532, and 1548 N. Hicks Road - Preliminary & Final Planned Development)

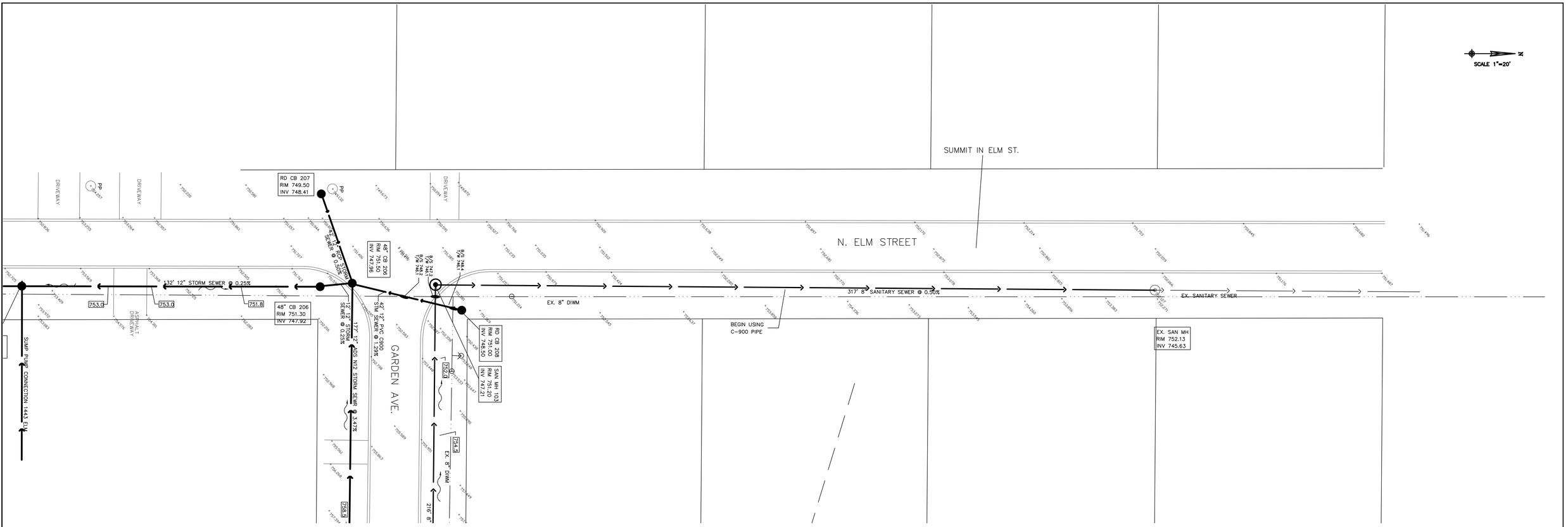

SPIES & ASSOCIATES, INC.
Civil Engineers – Land Surveyors
534 WEST CAMPUS DRIVE
ARLINGTON HEIGHTS, ILLINOIS 60004
PH 847.577.8808 FAX 847.577.0229

DRAWN BY: TJS	JOB NO. 5115
DESIGNED BY: TJS	SCALE: 1"=20'
CHECKED BY: TJS	DATE: 06-25-18

N. ELM STREET PROFILE
GARDEN SUBDIVISION

SHEET NO. 9 OF 12 SHEETS

Attachment: ENG plans - 5115-PROFILES 3 (1500, 1532, and 1548 N. Hicks Road - Preliminary & Final Planned Development)

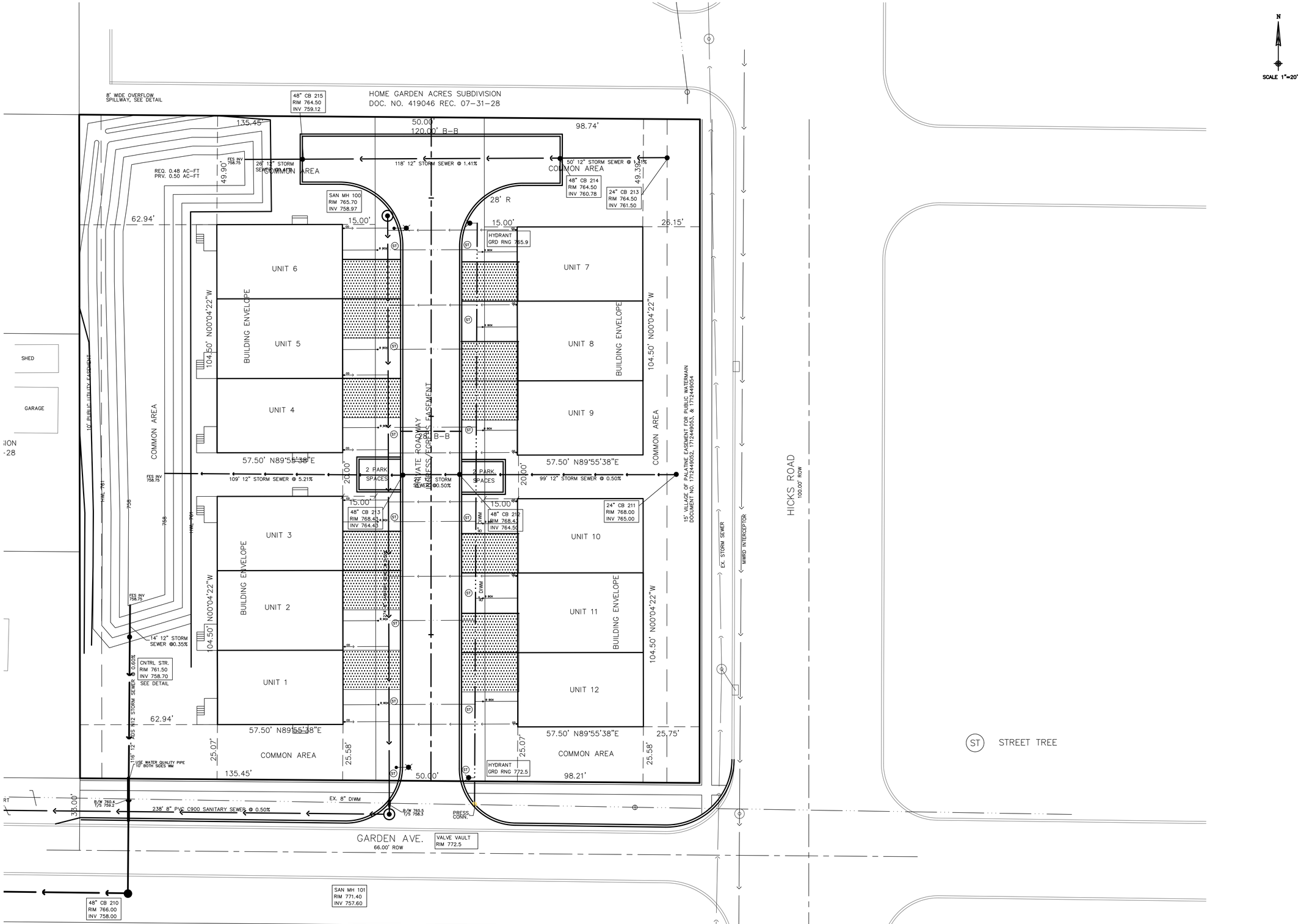

SPIES & ASSOCIATES, INC.
Civil Engineers – Land Surveyors

534 WEST CAMPUS DRIVE
ARLINGTON HEIGHTS, ILLINOIS 60004
PH 847.577.8808 FAX 847.577.0229

REVISIONS

DRAWN BY: TJS	JOB NO. 5115
DESIGNED BY: TJS	SCALE: 1"=20'
CHECKED BY: TJS	DATE: 06-25-18

DEVELOPMENT SITE PLAN
GARDEN SUBDIVISION

SHEET NO. 6 OF 12 SHEETS

Attachment: ENG plans - 5115-UTILITY PLAN (1500, 1532, and 1548 N. Hicks Road - Preliminary & Final Planned Development)

Hicks/Garden Subdivision

Subject Property

The subject property is comprised of 3 parcels located at the northwest corner of Hicks Rd and Garden Ave. in Palatine. The total area of the property is 1.97 acres. The 2 southern parcels are vacant and the northern parcel contains a 1 story frame home with 2 sheds. The vegetation on the property is primarily made of open grasses with scattered tress ranging in size from 6” up to 36”.

The site generally drains from the southeast toward the northwest corner of the site, across the adjacent property at the northwest corner of the site and toward Elm Street some 300 feet west of the subject property.

Proposed Development

Skar Development, Inc. intends to develop the site into four 3 unit (12 units total) single story townhome residences. A single street is to be constructed from Garden Ave north to the northern end of the site ending in a hammerhead configuration. There will be 6 units on each side of the road.

Stormwater detention and volume control will be provided at the northwest corner of the site. Both the existing 3 yr. runoff (1.68 cfs) and the 100 yr. runoff (3.68 cfs) are tributary toward the nw corner of the site. Based on our calculations of the proposed impervious coverage, 0.07 ac-ft of Volume Control and 0.41 ac-ft of Detention (0.48 ac-ft total) will be required for the development. The storage will be combination of an open basin, as shown on the engineering plans. The outfall for the basin (100 yr. 0.59 cfs) will be directed (via storm sewer) southerly to Garden Ave, westerly to Elm St, then southerly to Home St. where it will connect to an existing storm sewer along Home St. Should a storm in excess of a 100 year event be encountered the overflow from the basin, will still be directed to the northwest corner of the site, but all other storms up to the 100 yr event will be directed southerly.

534 W. Campus Dr. Arlington Heights, Il. 60004 (847) 577-8808 Fax (847) 577-0229
www.spiesandassociates.com

Attachment: ENG narrative - Hicks Garden narrative (Petitioner submittal) (1500, 1532, and 1548 N. Hicks Road - Preliminary & Final Planned

An 8” watermain exists along the north side of Garden Ave. An 8” tap will be made on the main and an 8” line will be run northerly to serve the proposed units. The main will terminate at the hammerhead of the roadway. Each unit will be served with a 1” dia. Type K copper water service.

Currently the sanitary sewer in the area terminates on Elm St. approximately 300 feet west of the site and 300 feet north of Garden St. The sanitary sewer will be extended south along Elm to garden, east along Garden to the site then north along the proposed road terminating at the hammerhead of the roadway. Each unit will be served with a 6” PVC SDR 26 sewer service.

534 W. Campus Dr. Arlington Heights, Il. 60004 (847) 577-8808 Fax (847) 577-0229
www.spiesandassociates.com

Attachment: ENG narrative - Hicks Garden narrative (Petitioner submittal) (1500, 1532, and 1548 N. Hicks Road - Preliminary & Final Planned

FRONT ELEVATION -BUILDING MIX "A-B-A"

FRONT ELEVATION -BUILDING MIX "A-B-A"

KF WALTER TOWNHOMES
PALATINE, IL 60067

FRONT ELEVATION- BUILDING MIX- "A-B-A"

AUGUST 03, 2018

MATTHIAS JANS ARCHITECT
602 ACADEMY DR, NORTHBROOK, IL
VOICE (847) 344-5247 FAX (224) 326-2488

Attachment: ARCH plans -FLAT August. 03 2018 front elevation landscaping psd (1500, 1532, and 1548 N. Hicks Road - Preliminary & Final

REAR ELEVATION BUILDING MIX "A-B-A"

REAR ELEVATION STREETSCAPE BUILDING MIX "A-B-A"

KF WALTER TOWNHOMES
PALATINE, IL 60067

REAR ELEVATION- BUILDING MIX- "A-B-A"

AUGUST 03, 2018

MATTHIAS JANS ARCHITECT
602 ACADEMY DR, NORTHBROOK, IL
VOICE (847) 344-5297 FAX (224) 326-2488

Attachment: ARCH plans - Flat August. 03 2018 rear elevation landscaping psd (1500, 1532, and 1548 N. Hicks Road - Preliminary & Final

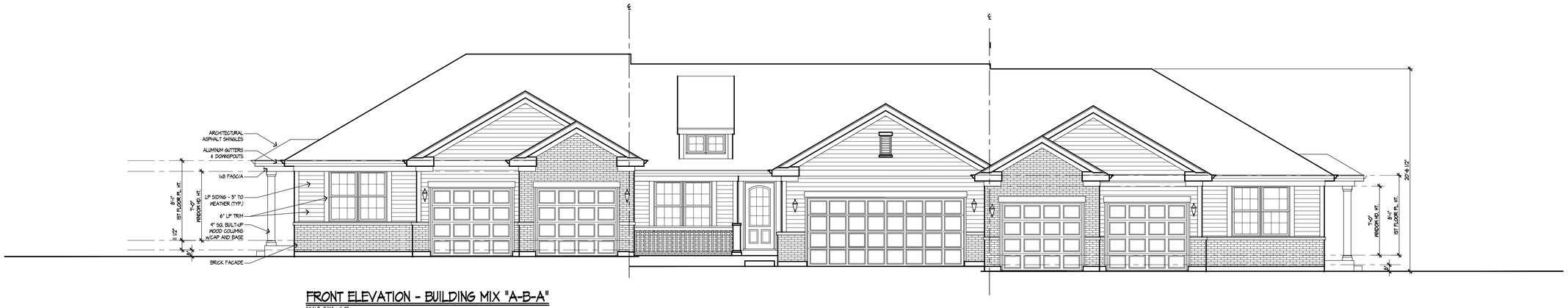

FRONT ELEVATION - BUILDING MIX "A-B-A"

SCALE: 3/16" = 1'-0"

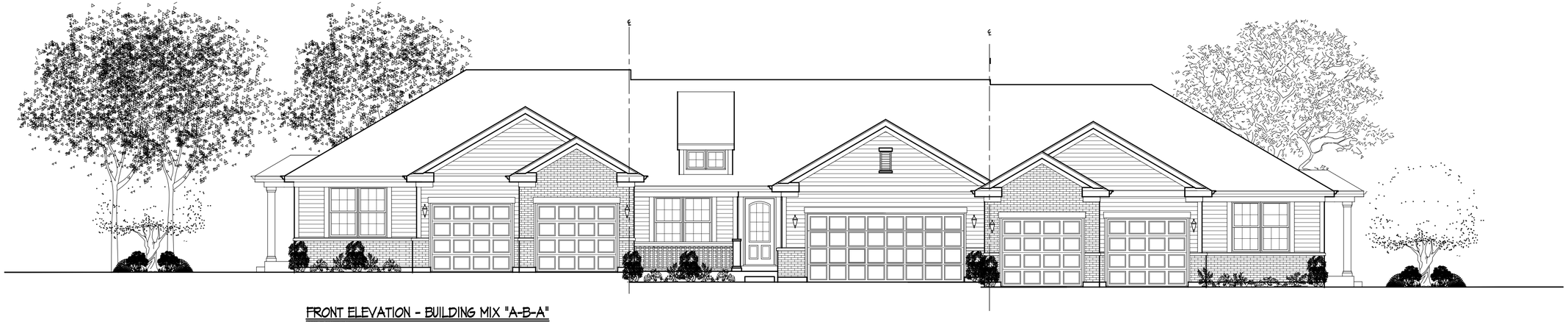

FRONT ELEVATION - BUILDING MIX "A-B-A"

SCALE: 3/16" = 1'-0"

FRONT ELEVATION STREETSCAPE - ABA MIX

SCALE: 3/32" = 1'-0"

COPYRIGHT © 2017 MATTHIAS JANS ARCHITECT ALL RIGHTS RESERVED

MATTHIAS JANS ARCHITECT
602 ACADEMY DR. NORTHBROOK, IL 60062
VOICE (847) 344-5241 FAX (224) 326-2483
mj@matthiasjans.com

KF WALTER TOWNHOMES
PALATINE, IL 60067

LICENSED ARCHITECT
MATTHIAS JANS
01-10159
STATE OF ILLINOIS
exp 11/30/18

REVISION DATES
DATE 1

PROJ. START
08/07/17

PLA

JOB #
17100

1

Attachment: ARCH plans - Master - townhouse -ABA MIX (1500, 1532, and 1548 N. Hicks Road - Preliminary & Final Planned Development)

LEFT SIDE ELEVATION - UNIT A

SCALE: 1/4" = 1'-0" SLAB ON GRADE

RIGHT SIDE ELEVATION - UNIT A

SCALE: 1/4" = 1'-0" SLAB ON GRADE

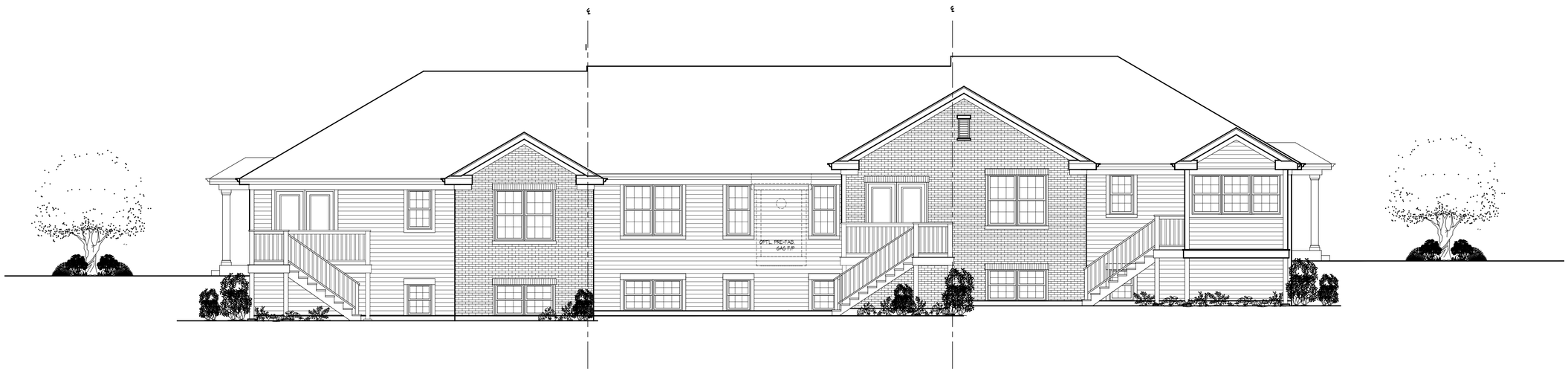

REAR ELEVATION - BUILDING MIX "A-B-A"

SCALE: 3/16" = 1'-0"

REAR ELEVATION STREETSCAPE - BUILDING MIX "A-B-A"

SCALE: 3/32" = 1'-0"

COPYRIGHT © 2017 MATTHIAS JANS ARCHITECT ALL RIGHTS RESERVED

MATTHIAS JANS ARCHITECT
602 ACADEMY DR, NORTHBROOK, IL 60062
VOICE (847) 344-5241 FAX (224) 326-2483
mj@matthiasjans.com

KF WALTER TOWNHOMES
PALATINE, IL 60067

LICENSED ARCHITECT
MATTHIAS JANS
01-10159
STATE OF ILLINOIS
exp 11/30/18

REVISION DATES
DATE 1

PROJ. START
08/07/17

PLA

JOB #
17100

2

Attachment: ARCH plans - Master - townhouse - ABA MIX (1500, 1532, and 1548 N. Hicks Road - Preliminary & Final Planned Development)

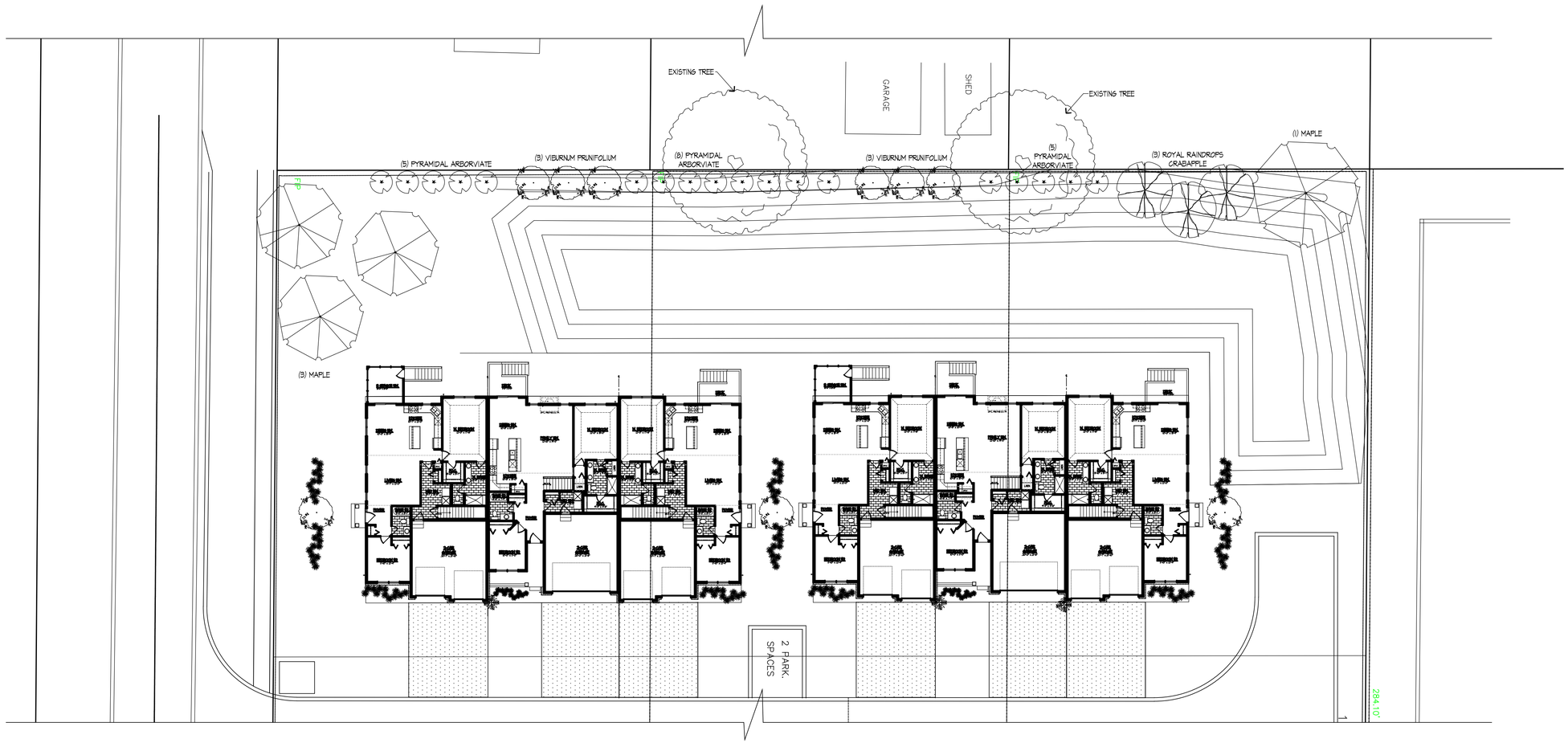

PROPOSED WEST END LANDSCAPING PLAN

SCALE: 1/16" = 1'-0"

COPYRIGHT © 2017 MATTHIAS JANS ARCHITECT ALL RIGHTS RESERVED

MATTHIAS JANS ARCHITECT
602 ACADEMY DR, NORTHBROOK, IL 60062
VOICE (847) 344-5241 FAX (224) 326-2483
mjan@matthiasjans.com

KF WALTER TOWNHOMES
PALATINE, IL 60067

LICENSED ARCHITECT
MATTHIAS JANS
01-10159
STATE OF ILLINOIS
exp 11/30/18

REVISION DATES
DATE 1

PROJ. START
08/07/17

PLA

JOB #
17100

3

Attachment: ARCH plans - Master - townhouse -ABA MIX (1500, 1532, and 1548 N. Hicks Road - Preliminary & Final Planned Development)

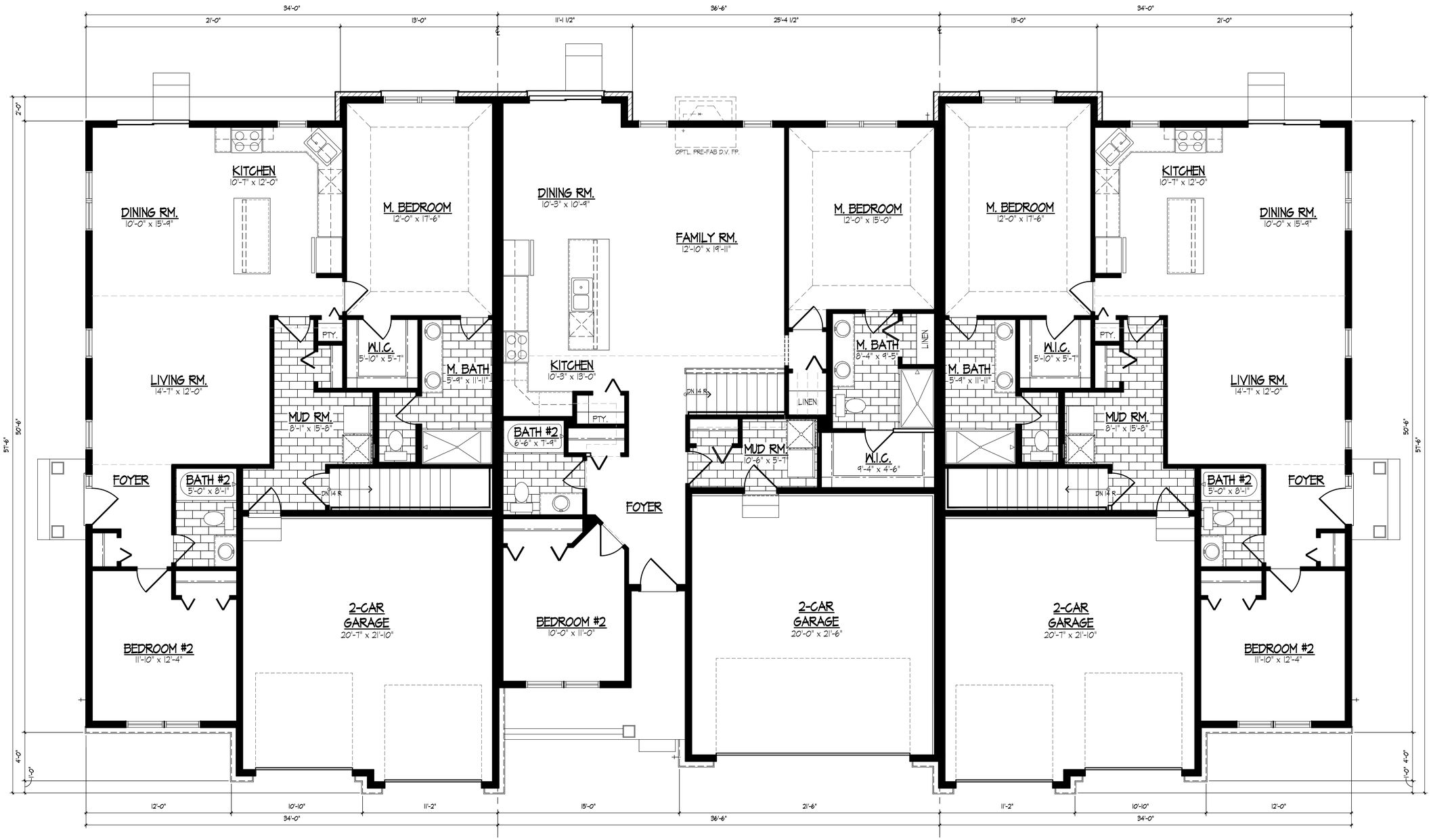

FIRST FLOOR PLAN - BUILDING MIX "ABA"

SCALE: 1/4" = 1'-0"

COPYRIGHT © 2017 MATTHIAS JANS ARCHITECT ALL RIGHTS RESERVED

MATTHIAS JANS ARCHITECT
602 ACADEMY DR, NORTHBROOK, IL 60062
VOICE (847) 344-5241 FAX (224) 326-2483
mj@matthiasjans.com

KF WALTER TOWNHOMES
PALATINE, IL 60067

LICENSED ARCHITECT
MATTHIAS JANS
01-10159
STATE OF ILLINOIS
exp 11/30/18

REVISION DATES
DATE 1

PROJ. START
08/07/17

PLA

JOB #
17100

4

Attachment: ARCH plans - Master - townhouse -ABA MIX (1500, 1532, and 1548 N. Hicks Road - Preliminary & Final Planned Development)

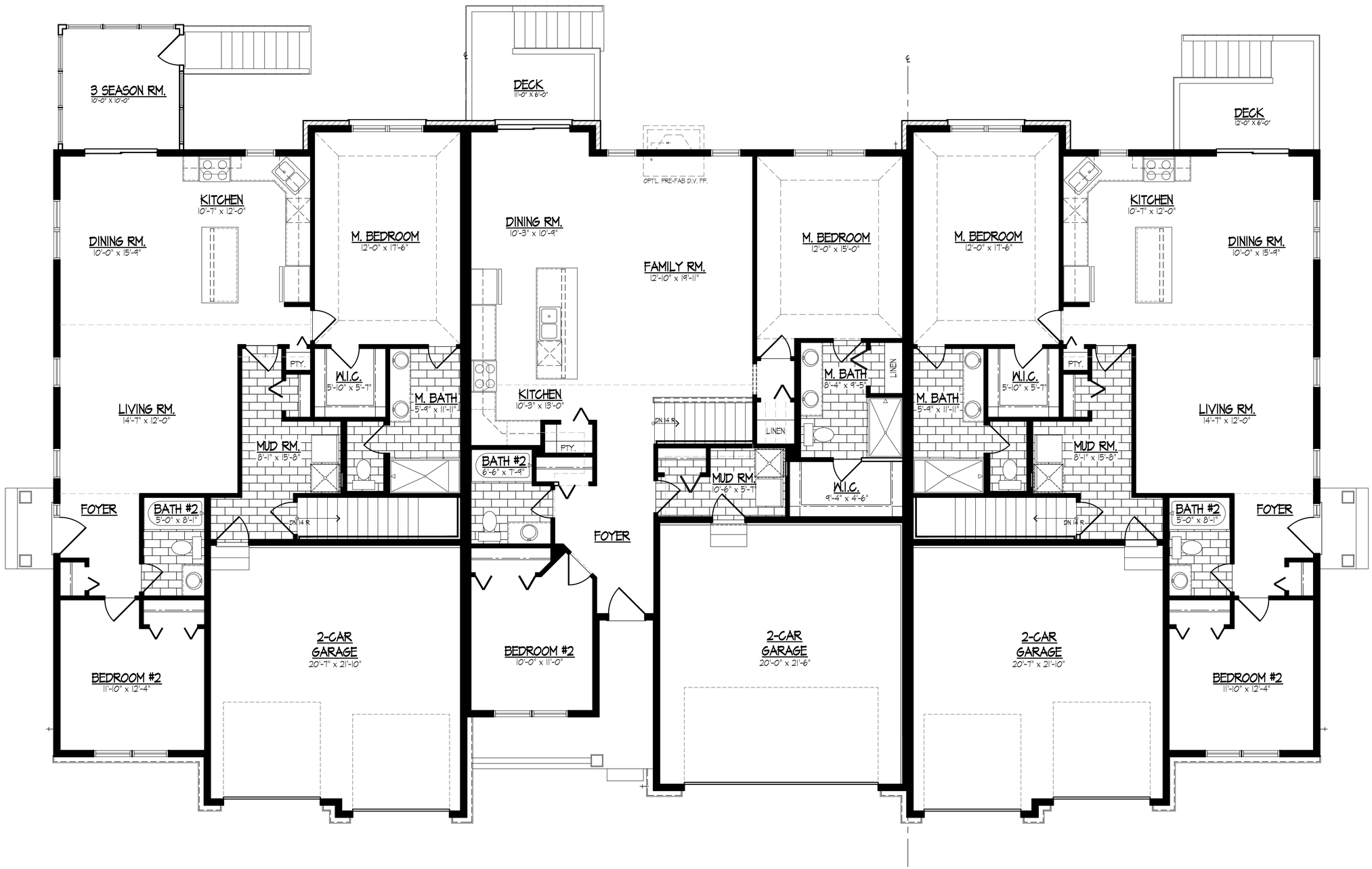

FIRST FLOOR PLAN - BUILDING MIX "ABA"

SCALE: 1/4" = 1'-0"

COPYRIGHT © 2017 MATTHIAS JANS ARCHITECT ALL RIGHTS RESERVED

MATTHIAS JANS ARCHITECT
602 ACADEMY DR, NORTHBROOK, IL 60062
VOICE (847) 344-5241 FAX (224) 326-2483
mj@matthiasjans.com

KF WALTER TOWNHOMES
PALATINE, IL 60067

LICENSED ARCHITECT
MATTHIAS JANS
01-10159
STATE OF ILLINOIS
exp 11/30/18

REVISION DATES
DATE 1

PROJ. START
08/07/17

PLA

JOB #
17100

5

Attachment: ARCH plans - Master - townhouse -ABA MIX (1500, 1532, and 1548 N. Hicks Road - Preliminary & Final Planned Development)

FINISHED BASEMENT PLAN - UNIT "A"

FINISHED BASEMENT PLAN - UNIT "B"

FINISHED BASEMENT PLAN - UNIT "A"

COPYRIGHT © 2017 MATTHIAS JANS ARCHITECT ALL RIGHTS RESERVED

MATTHIAS JANS ARCHITECT
602 ACADEMY DR, NORTHBROOK, IL 60062
VOICE (847) 344-5241 FAX (224) 326-2483
mj@matthiasjans.com

KF WALTER TOWNHOMES
PALATINE, IL 60067

LICENSED ARCHITECT
MATTHIAS JANS
01-10159
STATE OF ILLINOIS
exp 11/30/18

REVISION DATES
DATE 1

PROJ. START
08/07/17

PLA

JOB #
17100

6

Attachment: ARCH plans - Master - townhouse -ABA MIX (1500, 1532, and 1548 N. Hicks Road - Preliminary & Final Planned Development)

Hicks and Garden

A Proposal for 12 Ranch Townhomes

KF Walter Homes is endeavoring to purchase properties at 1548 N Hicks and two vacant parcels immediately to the south. Our plan is to improve the properties with 12 ranch townhome residences, featuring (4) buildings with (3) units in each. What follows is a summary of changes made to the original submittal in direct response to concerns raised by neighbors, staff and the Planning Commission.

Working openly with the village and surrounding neighbors, we hope that the information that follows helps move the project toward a final, agreeable design for all parties involved.

Storm Water

The storm water from the site currently runs off uninhibited through the northwest corner toward the creek, following the "path of least resistance." In the strictest sense, the water currently flowing off the property, while eventually making its way to the creek, may also inundate other low areas on neighboring properties.

As rain falls on the subject property, our storm system is designed to gather all of it and direct it into the storm water detention area. Water will not flow freely off the property as it does now. It will be detained and be released from the site at a runoff rate about 1/3 of its current rate. This design accounts for all new impervious surfaces created by the project.

Off site to our project, and to the benefit of the neighborhood in general, three (formerly two) storm inlets will be installed. One will be on the west side of Elm near the intersection of Elm and Garden. The second (newly added) will be at the northeast corner of the same intersection. The third is approximately half way between Garden and Home on the west side of the street. These new structures, working together, will ease current flooding conditions.

On the east side of Elm as the grade runs toward Home, the ditch will be properly graded above the new storm pipe to facilitate better storm water flow above ground.

Architecture and Land Planning

The western units have a lookout basement conditions that are respectful to the existing property contours. We have seen proposals for the property which do the opposite; filling in the contours, raising building elevations to create level building pads over the entire property, and forcing structures to an even higher starting point than existing conditions. It is easy to see how this scenario would be viewed as undesirable from a building height perspective.

Our design has taken both the topography of the property and the surrounding conditions into consideration. In keeping with that premise, we have made changes to the buildings from the original submittal. They now follow a "step-down" pattern as you move to the north matching the existing contours to "blend in."

We understand the lack of sensibility a large 2.5 story townhome building (or an office building) conveys. It is clear that within this neighborhood exceedingly tall buildings would be obtrusive and out of character. Ranch townhomes would be more appropriate with ridgelines 10-15 ft lower than conventional townhomes. We have taken steps reduce the height of our ranch buildings even further. The ridgelines are now at 20ft as opposed to the original design of 22ft. We also added the design element of a dormer over each middle unit to break up the roof area further.

Additional architectural enhancements include modified gable ends and increased amounts of brick at both front and rear elevations.

With regard to the land plan, we have moved the entrance to the community east, which provides for a flatter detention design that blends with existing contours. It also increases the distance of the western buildings from neighbors directly behind.

Density and Traffic

We believe the age-targeted nature of the community will generate substantially less traffic than other potential uses, including commercial office space. The ITE manual gives ADT (average daily traffic) for various land uses from which we have gathered data:

Estimate of Average Daily Traffic (ADT) for 3 options:

Option 1: General Office
Option 2: Single Family Detached
Option 3: Senior Housing Attached

Based on Institute of Transportation Engineers (ITE) the ADT for the 3 uses are as follows:

Option 1: 10 trips per 1000 sf
Option 2: 9.57 Trips per dwelling unit
Option 3: 3.71 trips per dwelling unit

Based on these rates the ADT for the site would be:

Option 1: 204 trips (using same foot print as proposed)
Option 2: 57 trips (using 6 lots, as proposed by others)
Option 3: 45 trips (using 12 units)

Clearly, age-targeted use is the best development alternative in terms of traffic generation.

Entrance on Hicks Road

We believe strongly that an additional ingress/egress on Hicks road is not feasible due to existing conditions. Given the parameters by which IDOT grants access to roads under their jurisdiction, a new access point would likely be denied.

Our future homeowners would be better served with a safer, more navigable entrance on Garden. Furthermore Hicks, south of Dundee, does not warrant another access point whether IDOT would approve it or not. In the first 600 ft as you move south from Dundee, there are currently (5) access points; Kostas, Walgreens, Jewel (2), and Garden. If you include the current single family residence, the total is (6). If new single family homes were built on the (2) currently vacant lots under consideration, the total would be (8) curb cuts.

Another drawback to additional curb cuts on Hicks is the fire station directly across the street.

In any case, we believe that no additional access points to Hicks are warranted, nor would it be a safe alternative.

Considering Site Alternatives

In the village's long term planning goals, this site is shown as suitable for retail space. While that may be consistent with contiguous property designations, it creates additional burdens for its single family neighbors. Signage (lighted), dumpsters, lot and rear building lighting, parking, not to mention traffic, would all have significant impact on our neighbors.

Commercial office space, another alternative, would have an even greater negative impact.

Conventional, 2 – 2.5 story townhomes lack aesthetic elements that foster a smooth transition between retail and single family. They require more units per building and elevated roof lines. Instead of helping to generate an imaginary line that moves smoothly from the top of the retail to the single family homes, they project through it creating a lack of visual continuity.

Ranch townhomes as proposed would nestle nicely into this property. While they are not single family per se, they do mass similarly and are complimentary to the surrounding single family properties. They:

1) Are visually pleasing with a low ridge line
2) They are residential, not retail or office space
3) They are age targeted to 55+
4) They are the best alternative that could be built under the approved village long term plan.

These ranch townhomes provide an excellent, clean, low traffic buffer to Hicks Rd. That cannot be said of the alternatives.

It has been inferred that this proposed project does not "fit" in the neighborhood. Consider, there are four sides to this property. On two sides are single family residences; on the other two commercial/retail. To establish retail or commercial space here would be well within the parameters of "fitting in" as the property is flanked equally by commercial/retail and single family homes.

We contend that a ranch townhome community of 12 units is an excellent transition between the existing retail along Hicks and the single family homes to the south and west.

Meeting a need

This kind of transitional housing fits neatly within Palatine's long term planning goals for the area. It also meets a growing market for Palatine's maturing population who are looking for single level, maintenance free living as an alternative to their existing home. We envision a very high number of these homes being purchased by long time Palatine residents who wish to stay in the community. Today, when this transition time comes for our target buyers, many of them leave Palatine due to lack of local housing options that feature single level, maintenance free living. We propose a housing option that keeps them in Palatine…their home…a community with which they are familiar.

A Good Compromise

We believe that this proposal provides an excellent alternative use to a property whose current R-1 designation is outdated. Our plan is one that gives a respectful nod to both the neighborhood (by remaining residential) and the community at large, creating a highly desirable product on an otherwise transitional site.

VILLAGE OF PALATINE

PRELIMINARY & FINAL PLANNED DEVELOPMENT

Department of Planning & Zoning
200 E. Wood Street · Palatine, IL · 60067-5339
Telephone: (847) 359-9047 · Fax (847) 963-6247
www.palatine.il.us

Office Use Only		
	Project Planner	Zoning Case #
	Filing Fee	Notification Deadline
	PC Public Hearing Date	Village Council Date

date received

PLEASE TYPE OR PRINT IN INK:

1. Name of Petitioner(s): KF Walter Homes
2. Authorized Agent of Petitioner (if different):

   Name: _____

   Address: _____

   Telephone No. _____ Business No. _____

   Email: _____

   Relationship to Petitioner: _____
3. Property Interest of Petitioner(s): Contract Purchaser
   Owner, Lessee, Contract Purchaser, etc.
4. Address of the property for which this application is being filed:
   1548 N Hicks 1500, 1532 N Hicks
5. All existing land use(s) on the property are:
6. Current zoning of property: R-1 Size of the property: ~2 acres
7. Briefly describe the proposed Planned Development with regards to types of uses proposed, number and types of units, development mix, amenities to be provided, etc.:

We are proposing (4) - 3unit, Ranch Townhome buildings to be built on these 3 lots. These are age targeted single level ranch townhomes, maintenance free.

Attachment: Application (1500, 1532, and 1548 N. Hicks Road - Preliminary & Final Planned Development)

8. Describe any Variations from the Village Ordinances which would be required if the proposed Planned Development ere to be developed as a traditionally zoned project (if any):

We request PUD zoning i/o the existing R-1 designation.

9. The attached Checklist of Documents outlines all required submittals before a project may be scheduled for the required public hearing before the Plan Commission. All required documents must be submitted with this Petition.

10. The petitioner's signature below indicates that the information contained in this application and on any accompanying documents is true and correct to the best of his/her knowledge.

Signature: _____ Date: 7/18/18

State of Illinois

County of Cook

This instrument was acknowledged before me on July 18, 20 18 by Dorothy M Lance

DOROTHY M LANCE
Official Seal
Notary Public - State of Illinois
My Commission Expires Oct 30, 2020

(Seal)

Dor M Lance
Notary Public

Spies & Associates, Inc **Civil Engineers-Land Surveyors**

July 12, 2018

Mr. Ben Vyverberg
Village of Palatine
200 E. Wood St.
Palatine, Il. 60067

Re: Hicks/Garden Subdivision

Dear Mr. Vyverberg,

We have prepared the final engineering plans for the above named subdivision. There have been a few revisions since our preliminary was submitted. They are:

- We have moved the buildings further east to provide more separation along the west line.
- We have changed the driveway side on several of the units.
- We have expanded the surface detention area and eliminated the underground storage.
- We have included the 12 items from the April 19, 2018 memo from Mr. Ruppert.

Enclosed are 6 sets of the engineering, stormwater calculations, and plat of subdivision. If you have any questions, please let me know. Thank you for your time and cooperation in this matter.

Sincerely,
Spies & Associates, Inc.

Timothy J. Spies, PE
President

RECEIVED
JUL 12 2018
PLANNING & ZONING DEPARTMENT

534 W. Campus Dr. Arlington Heights, Il. 60004 (847) 577-8808 Fax (847) 577-0229
www.spiesandassociates.com

Attachment: Application (1500, 1532, and 1548 N. Hicks Road - Preliminary & Final Planned Development)

PUBLIC NOTICE
A public hearing will be held before the Palatine Plan Commission on Tuesday, August 21, 2018, at 7:00 PM, in the Palatine Village Council Chambers, 200 E. Wood St., relative to a request for the following:
1. Preliminary and Final Planned Development to allow 12 ranch-style townhomes
The property is commonly known as 1548 N. Hicks Road (Parcel ID #02-11-102-012), 1532 N. Hicks Road (Parcel ID #02-11-102-013) and 1500 N. Hicks Road (Parcel ID #02-11-102-014).
The above petition has been filed by KF Walter Homes (Greg Rose) and is available for examination in the office of the Village Clerk, 200 E. Wood Street.
FILE #: 18-21
VILLAGE OF PALATINE
Dennis Dwyer, Chair
Palatine Plan Commission
DATED: This 6th day of August 2018.
Published in Daily Herald August 6, 2018 (4506552)

CERTIFICATE OF PUBLICATION

Paddock Publications, Inc.

Daily Herald

Corporation organized and existing under and by virtue of the laws of the State of Illinois, DOES HEREBY CERTIFY that it is the publisher of the **DAILY HERALD**. That said **DAILY HERALD** is a secular newspaper and has been circulated daily in the Village(s) of Algonquin,Antioch,Arlington Heights,Aurora,North Aurora,Bannockburn, Barrington,Barrington Hills,Lake Barrington,North Barrington,South Barrington,Bartlett,Batavia,Buffalo Grove,Burlington,Campton Hills, Carpentersville,Cary,Crystal Lake,Deerfield,Deer Park,Des Plaines,Elburn, East Dundee,Elgin,South Elgin,Elk Grove Village,Fox Lake, Fox River Grove,Franklin Park,Geneva,Gilberts,Glenview,Grayslake, Green Oaks,Gurnee,Hainesville,Hampshire,Hanover Park,Hawthorn Woods, Highland Park,Highwood,Hoffman Estates,Huntley,Inverness,Island Lake, Kildeer,Lake Bluff,Lake Forest,Lake in the Hills,Lake Villa,Lake Zurich, Libertyville,Lincolnshire,Lindenhurst,Long Grove,Melrose Park,Montgomery Morton Grove,Mt.Prospect,Mundelein,Niles,Northbrook,Northfield,Northlake Palatine,Park Ridge,Prospect Heights,River Grove,Riverwoods, Rolling Meadows,Rosemont,Round Lake,Round Lake Beach,Round Lake Heights,Round Lake Park,Schaumburg,Schiller Park,Sleepy Hollow, St. Charles,Streamwood,Sugar Grove,Third Lake,Tower Lakes,Vernon Hills, Volo,Wadsworth,Wauconda,Waukegan,West Dundee,Wheeling,Wildwood, Wilmette

County(ies) of Cook, Kane, Lake, McHenry
and State of Illinois, continuously for more than one year prior to the date of the first publication of the notice hereinafter referred to and is of general circulation throughout said Village(s), County(ies) and State.

I further certify that the DAILY HERALD is a newspaper as defined in "an Act to revise the law in relation to notices" as amended in 1992 Illinois Compiled Statutes, Chapter 715, Act 5, Section 1 and 5. That a notice of which the annexed printed slip is a true copy, was published August 6, 2018 in said DAILY HERALD.

IN WITNESS WHEREOF, the undersigned, the said PADDOCK PUBLICATIONS, Inc., has caused this certificate to be signed by, this authorized agent, at Arlington Heights, Illinois.

PADDOCK PUBLICATIONS, INC.
DAILY HERALD NEWSPAPERS

BY Paula Raltzman
Authorized Agent

Control # 4506552

Attachment: Public Notice (1500, 1532, and 1548 N. Hicks Road - Preliminary & Final Planned Development)